SPADFLOW
SPRAYING SYSTEMS AND NOZZLES

2

ENG-036-R01-02.08.10

اسپری نازل های صنعتی

مخروطی چتری

HOLLOW CONE

INDUSTRIAL SPRAY NOZZLES

2L 226 2-1
2L 214, 2L 216 2-2
2B NCJ 2-3

SPADFLOW
SPRAYING SYSTEMS AND NOZZLES

Axial Flow **Hollow-Cone** Spray Nozzles
Spadflow Series **2L 226**

Webpage + STP

2L 226

Nozzle for Retaining Nut

Applications:

- Disinfection
- Humidification
- Cooling
- Chemical processes
- Adiabatic cooling

Properties:

- Assembly with retaining nut 3/8 BSPP
- Extremely fine
- Fog-like hollow cone spray

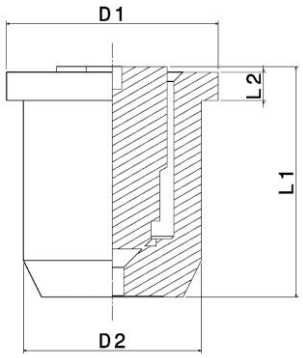

2L 226

Dimensions [mm]				Weight
L_1	L_2	D_1	D_2	
18.0	2.0	14.8	12.65	13 g

Material*	Code
S.S.304	2
S.S.316	3

* Different materials are available upon request

α	Spray coverage @ 250 mm
60°	120-160
80°	190-300

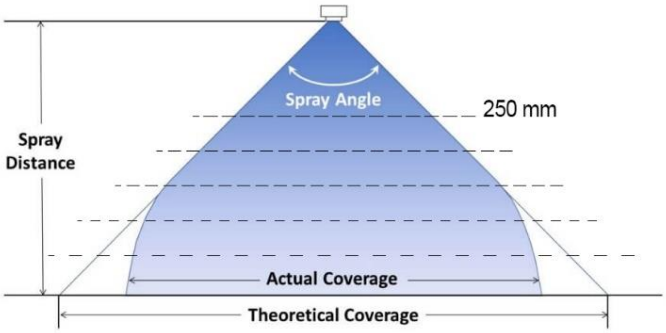

Spray angle (α)	Code	B Ø [mm]	E Ø [mm]	Mesh size [mm] Strainer	Flow rate [l/min] P [bar] 2.0	3.0	5.0	7.0	10.0	20.0	50.0	100.0
60°	**2L 226 00 . 060**	0.10	0.10	0.04	-	-	**0.013**	0.015	0.018	0.026	0.041	0.058
	2L 226 01 . 060	0.15	0.15	0.04	-	0.015	**0.019**	0.022	0.027	0.038	0.060	0.085
	2L 226 05 . 060	0.20	0.15	0.04	0.017	0.021	**0.027**	0.032	0.038	0.054	0.085	0.121
80°	**2L 226 08 . 080**	0.25	0.25	0.10	0.025	0.031	**0.040**	0.047	0.057	0.080	0.126	0.179
	2L 226 12 . 080	0.35	0.35	0.10	0.039	0.048	**0.062**	0.073	0.088	0.124	0.196	0.277
	2L 226 14 . 080	0.40	0.40	0.10	0.052	0.064	**0.082**	0.097	0.116	0.164	0.259	0.367
	2L 226 16 . 080	0.45	0.45	0.10	0.065	0.080	**0.103**	0.122	0.146	0.206	0.326	0.461
	2L 226 18 . 080	0.55	0.35	0.20	0.082	0.101	**0.130**	0.154	0.184	0.260	0.411	0.581
	2L 226 20 . 080	0.60	0.35	0.20	0.106	0.130	**0.168**	0.199	0.238	0.336	0.531	0.751
	2L 226 24 . 080	0.70	0.50	0.20	0.165	0.202	**0.261**	0.309	0.369	0.522	0.825	1.167
	2L 226 28 . 080	0.90	0.55	0.20	0.247	0.302	**0.390**	0.461	0.552	0.780	1.233	1.744

B = bore diameter E = narrowest free cross section

036 – R01 – C00

Order No.: CODE . MATERIAL

Example.: 2L 226 00 . 060 . 3 Type 2L 226 with mentioned Q(lpm)@P(bar), Spray angle: 60˚, S.S.316

SPADFLOW
SPRAYING SYSTEMS AND NOZZLES

Axial Flow **Hollow-Cone** Spray Nozzles
Spadflow Series **2L 214 – 2L 216**

Webpage + STP

2L 214
2L 216

Low Flow Axial Hollow-cone

Applications:

- Cooling and cleaning of air
- and gas
- Dust control
- Spraying onto filters
- Spray drying
- Desuperheating
- Sprinkling

Properties:

- Extremely fine
- Uniform hollow cone spray

2L 214 – 2L 216

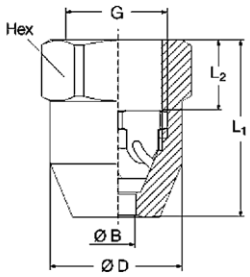

Size	Conn. code			Dimensions [mm]				Weight
	BSPT	BSPP	NPT	L_1	L_2	D	Hex	
1/8"	018T	018P	018N	18.0	6.0	16.0	17	27 g
3/8"	038T	038P	038N	29.0	12.0	21.3	22	60 g

Material*	Code
Brass	1
S.S.304	2
S.S.316	3

* Different materials are available upon request

α	Spray coverage @ 250 mm
60°	200
80°	450
90°	500

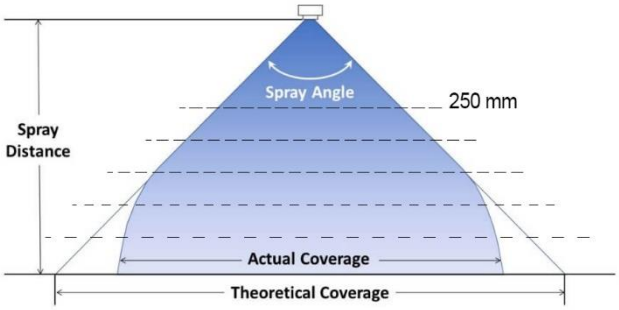

Spray angle α	Code	Connection** [inch]	B Ø [mm]	E Ø [mm]	Flow rate [l/min] P [bar] 0.5	1.0	2.0	3.0	5.0	10.0	20.0
60°	**2L 214 18 . 060**	**1/8"**	0.50	0.50	-	-	0.08	0.10	**0.13**	0.18	0.25
	2L 216 32 . 060	**3/8"**	1.00	1.00	-	0.28	0.40	0.49	**0.63**	0.89	1.26
	2L 216 36 . 060	**3/8"**	1.40	1.40	-	0.45	0.63	0.77	**1.00**	1.41	1.99
	2L 216 40 . 060	**3/8"**	2.00	2.00	-	0.71	1.00	1.22	**1.58**	2.24	3.16
80°	**2L 214 24 . 080**	**1/8"**	1.00	0.50	-	-	0.16	0.20	**0.25**	0.36	0.51
	2L 214 30 . 080	**1/8"**	1.80	0.50	-	0.23	0.32	0.39	**0.51**	0.72	1.01
90°	**2L 216 49 . 090**	**3/8"**	6.00	2.00	-	1.20	1.70	2.08	**2.69**	3.80	5.38
	2L 216 56 . 090	**3/8"**	4.00	2.00	-	1.77	2.50	3.06	**3.95**	5.59	7.91
	2L 216 64 . 090	**3/8"**	3.50	2.00	2.00	2.83	4.00	4.90	**6.32**	8.94	12.65
	2L 216 68 . 090	**3/8"**	4.00	2.00	2.50	3.54	5.00	6.12	**7.91**	11.18	15.81
	2L 216 72 . 090	**3/8"**	5.00	2.00	3.15	4.45	6.30	7.72	**9.96**	14.09	19.92
	2L 216 77 . 090	**3/8"**	6.00	2.00	4.30	6.00	8.50	10.40	**13.40**	19.00	26.90

** Different connection sizes are available upon request
B = bore diameter E = narrowest free cross section

036 – R01 – C00

Order No.: CODE . CONNETION . MATERIAL

Example.: 2L 214 18 . 060 . 018T . 3 Type 2L 214 with mentioned Q(lpm)@P(bar), Spray angle: 60˚, 1/8" BSPT, S.S.316

SPADFLOW
SPRAYING SYSTEMS AND NOZZLES

Axial Flow **Hollow-Cone** Spray Nozzles
Spadflow Series **2B NCJ**

Webpage + STP

2B NCJ

High Flow Hollow-Cone Nozzle

Applications:

- Venturi scrubbing

Properties:

- High velocity
- Male and female connections
- Flanged connections available
- Spray is coarse and extremely hard-driving

2B NCJ

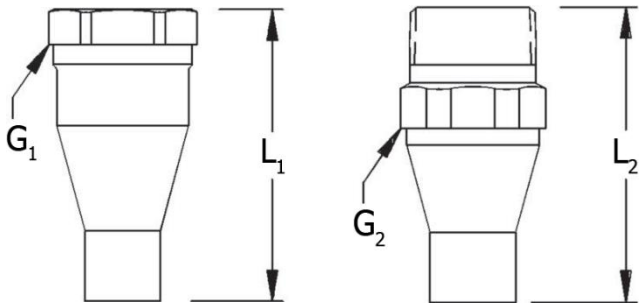

Female version Male version

Size	Conn. code			Dimensions [mm]			Weight (g) (metal)
	BSPT	BSPP	NPT	L_1	G_2	L_2	
3/4"	034T	034P`	034N	82.6	28.4	82.6	0.34
1"	100T	100P	100N	88.9	35.1	88.9	0.45
1 1/4"	114T	114P	114N	102	44.5	102	0.57
1 1/2"	112T	112P	112N	127	50.8	127	1.02
2"	200T	200P	200N	152	63.5	152	1.13
2 1/2"	212T	212P	212N	194	76.2	178	2.61
3"	300T	300P	300N	203	88.9	203	2.84
4"	400T	400P	400N	278	114	251	6.80
6"	600T	600P	600N	381	168	343	15.9

Material*	Code
Brass	1
S.S.304	2
S.S.316	3

* Different materials are available upon request

α	Spray coverage @ 250 mm
15°	60
20°	90
30°	130

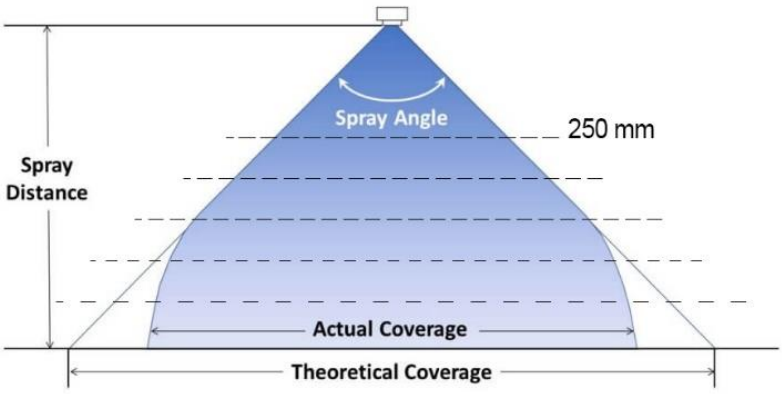

036 – R01 – C00

Order No.: CODE . CONNETION . MATERIAL

Example: 2B NCJ 06 . 015 . 034T . 3 Type 2B NCJ with mentioned Q(lpm)@P(bar), Spray angle: 15˚, 3/4" BSPT, S.S.316

SPADFLOW
SPRAYING SYSTEMS AND NOZZLES

Axial Flow **Hollow-Cone** Spray Nozzles
Spadflow Series **2B NCJ**

Webpage + STP

2B NCJ

Spray angle α	Code	Connection** [inch]	B Ø [mm]	Flow rate [l/min] P [bar] 0.5	0.7	1.0 K factor	1.5	2.0	3.0	5.0	7.0
15°	**2B NCJ 06 . 015**	**3/4"**	7.52	23.1	27.0	32.0	38.7	**44.3**	53.6	68.1	79.8
	2B NCJ 12 . 015	**1"**	10.3	46.2	54.1	64.0	77.4	**88.6**	107	136	160
	2B NCJ 18 . 015	**1 1/4"**	12.3	69.3	81.1	95.9	116	**133**	161	204	239
	2B NCJ 26 . 015	**1 1/2"**	15.1	100	117	139	168	**192**	232	295	346
	2B NCJ 48 . 015	**2"**	20.2	185	216	256	310	**354**	429	545	638
	2B NCJ 72 . 015	**2 1/2"**	24.6	277	325	384	464	**532**	643	818	958
	2B NCJ 05 . 015	**3"**	29.5	404	473	560	677	**775**	938	1190	1400
	2B NCJ 90 . 015	**4"**	40.5	731	856	1010	1230	**1400**	1700	2160	2530
	2B NCJ 50 . 015	**6"**	54.0	1380	1580	1860	2260	**2580**	3130	3980	4660
20°	**2B NCJ 06 . 020**	**3/4"**	7.52	23.1	27.0	32.0	38.7	**44.3**	53.6	68.1	79.8
	2B NCJ 12 . 020	**1"**	10.3	46.2	54.1	64.0	77.4	**88.6**	107	136	160
	2B NCJ 18 . 020	**1 1/4"**	12.3	69.3	81.1	95.9	116	**133**	161	204	239
	2B NCJ 26 . 020	**1 1/2"**	15.1	100	117	139	168	**192**	232	295	346
	2B NCJ 48 . 020	**2"**	20.2	185	216	256	310	**354**	429	545	638
	2B NCJ 72 . 020	**2 1/2"**	24.6	277	325	384	464	**532**	643	818	958
	2B NCJ 05 . 020	**3"**	29.5	404	473	560	677	**775**	938	1190	1400
	2B NCJ 90 . 020	**4"**	40.5	731	856	1010	1230	**1400**	1700	2160	2530
	2B NCJ 50 . 020	**6"**	54.0	1380	1580	1860	2260	**2580**	3130	3980	4660
30°	**2B NCJ 06 . 030**	**3/4"**	7.52	23.1	27.0	32.0	38.7	**44.3**	53.6	68.1	79.8
	2B NCJ 12 . 030	**1"**	10.3	46.2	54.1	64.0	77.4	**88.6**	107	136	160
	2B NCJ 18 . 030	**1 1/4"**	12.3	69.3	81.1	95.9	116	**133**	161	204	239
	2B NCJ 26 . 030	**1 1/2"**	15.1	100	117	139	168	**192**	232	295	346
	2B NCJ 48 . 030	**2"**	20.2	185	216	256	310	**354**	429	545	638
	2B NCJ 72 . 030	**2 1/2"**	24.6	277	325	384	464	**532**	643	818	958
	2B NCJ 05 . 030	**3"**	29.5	404	473	560	677	**775**	938	1190	1400
	2B NCJ 90 . 030	**4"**	40.5	731	856	1010	1230	**1400**	1700	2160	2530
	2B NCJ 50 . 030	**6"**	54.0	1380	1580	1860	2260	**2580**	3130	3980	4660

** Different connection sizes are available upon request B = bore diameter

Order No.: CODE . CONNETION . MATERIAL

Example: 2B NCJ 06 . 015 . 034T . 3 Type 2B NCJ with mentioned Q(lpm)@P(bar), Spray angle: 15˚, 3/4" BSPT, S.S.316

SPAD FLOW
SPRAYING SYSTEMS AND NOZZLES

3

ENG-037-R01-02.08.10

اسپری نازل های صنعتی

مخروطی کامل

FULL CONE

INDUSTRIAL SPRAY NOZZLES

3SF 05 3-1

3L 490, 3L 491 3-4

3L 460, 3L 461 3-6

3L 405 3-8

3L 403 3-9

3L 422, 3L 423 3-11

3B TF 3-13

3S R 3-16

3B MP 3-18

SPADFLOW
SPRAYING SYSTEMS AND NOZZLES

Axial Flow **Full-Cone** Spray Nozzles
Spadflow Series **3SF 05**

Webpage + STP

3SF 05

Steel Industry Nozzle

Applications:

- Secondary cooling for continuous casting machine
- Products cooling
- Tank cooling
- Steel cleaning
- Pre-treatment in coating process
- Dust removal in mining and coal plants
- Spray of chemicals
- Leak test

Properties:

- Sprayed volume is evenly distributed across spray pattern
- Available with a range of spray angle
- Male and female thread available
- Good resistance to clogging

3SF 05

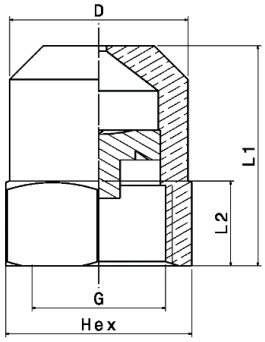

Size*	Conn. code			Dimensions [mm]				Weight
	BSPT	BSPP	NPT	L_1	L_2	D	Hex/Flats	
3/8”	038T	038P	038N	26.5	10	21.5	22	55 g

* Different connection sizes are available upon request

Material**	Code
Brass	1
S.S.304	2
S.S.316	3

** Different materials are available upon request

α	Spray coverage @ 200 mm
45°	80
50°	90
55°	105
60°	115
65°	130
70°	140
80°	170
90°	200

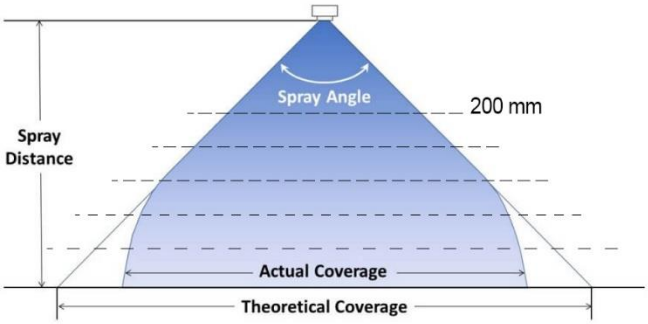

Spray angle	Code	General Code	Flow rate [l/min]						
			P [bar]						
			1.0 *K factor*	2.0	2.8	3.0	5.0	7.0	10
45°	**3SF 05 020 . 45**	**2045**	1.20	1.70	**2.00**	2.08	2.68	3.17	3.79
	3SF 05 025 . 45	**2545**	1.49	2.11	**2.50**	2.58	3.33	3.94	4.71
	3SF 05 030 . 45	**3045**	1.80	2.55	**3.00**	3.12	4.02	4.76	5.69
	3SF 05 035 . 45	**3545**	2.10	2.97	**3.50**	3.64	4.70	5.56	6.64
	3SF 05 040 . 45	**4045**	2.40	3.39	**4.00**	4.16	5.37	6.35	7.59

037– R01 – C00

Order No.: CODE . MATERIAL

Example: 3SF 05 040 . 065 . 038T . 1 Type 3SF 05 with mentioned Q(lpm)@P(bar), Spray angle: 65˚ , 3/8” BSPT, Brass

SPADFLOW
SPRAYING SYSTEMS AND NOZZLES

Axial Flow **Full-Cone** Spray Nozzles
Spadflow Series **3SF 05**

Webpage + STP

3SF 05

Spray angle	Code	General Code	Flow rate [l/min]						
			P [bar]						
			1.0 *K factor*	2.0	2.8	3.0	5.0	7.0	10
45°	3SF 05 047 . 45	4745	2.80	3.96	**4.70**	4.85	6.26	7.41	8.85
	3SF 05 050 . 45	5045	3.00	4.24	**5.00**	5.20	6.71	7.94	9.49
	3SF 05 055 . 45	5545	3.29	4.65	**5.50**	5.69	7.35	8.70	10.39
	3SF 05 060 . 45	6045	3.60	5.09	**6.00**	6.24	8.05	9.52	11.38
	3SF 05 070 . 45	7045	4.18	5.91	**7.00**	7.24	9.35	11.06	13.22
	3SF 05 080 . 45	8045	4.80	6.79	**8.00**	8.31	10.73	12.70	15.18
	3SF 05 100 . 45	10045	5.98	8.45	**10.00**	10.35	13.36	15.81	18.90
	3SF 05 120 . 45	12045	7.17	10.14	**12.00**	12.42	16.04	18.97	22.68
50°	3SF 05 060 . 50	6050	3.59	5.07	**6.00**	6.21	8.02	9.49	11.34
55°	3SF 05 060 . 55	6055	3.59	5.07	**6.00**	6.21	8.02	9.49	11.34
60°	3SF 05 014 . 60	1460	0.86	1.22	**1.44**	1.49	1.92	2.28	2.72
	3SF 05 022 . 60	2260	1.29	1.82	**2.16**	2.23	2.88	3.41	4.08
	3SF 05 025 . 60	2560	1.49	2.11	**2.50**	2.59	3.34	3.95	4.72
	3SF 05 027 . 60	2760	1.61	2.28	**2.70**	2.79	3.61	4.27	5.10
	3SF 05 030 . 60	3060	1.79	2.54	**3.00**	3.11	4.01	4.74	5.67
	3SF 05 035 . 60	3560	2.09	2.96	**3.50**	3.62	4.68	5.53	6.61
	3SF 05 036 . 60	3660	2.15	3.04	**3.60**	3.72	4.81	5.69	6.80
	3SF 05 049 . 60	4960	2.93	4.14	**4.90**	5.07	6.55	7.75	9.27
	3SF 05 060 . 60	6060	3.61	5.11	**6.04**	6.25	8.07	9.55	11.42
	3SF 05 072 . 60	7260	4.29	6.07	**7.18**	7.43	9.59	11.35	13.57
	3SF 05 165 . 60	16560	9.86	13.95	**16.50**	17.08	22.05	26.09	31.18
65°	3SF 05 010 . 65	1065	0.60	0.85	**1.00**	1.04	1.34	1.58	1.89
	3SF 05 015 . 65	1565	0.90	1.27	**1.50**	1.55	2.00	2.37	2.83
	3SF 05 016 . 65	1665	0.96	1.35	**1.60**	1.66	2.14	2.53	3.02
	3SF 05 020 . 65	2065	1.20	1.69	**2.00**	2.07	2.67	3.16	3.78
	3SF 05 024 . 65	2465	1.40	1.98	**2.40**	2.42	3.13	3.70	4.43
	3SF 05 025 . 65	2565	1.49	2.11	**2.50**	2.59	3.34	3.95	4.72
	3SF 05 030 . 65	3065	1.79	2.54	**3.00**	3.11	4.01	4.74	5.67
	3SF 05 033 . 65	3365	1.96	2.77	**3.28**	3.39	4.38	5.19	6.20
	3SF 05 035 . 65	3565	2.09	2.96	**3.50**	3.62	4.68	5.53	6.61
	3SF 05 038 . 65	3865	2.27	3.21	**3.80**	3.93	5.08	6.01	7.18
	3SF 05 040 . 65	4065	2.39	3.38	**4.00**	4.14	5.35	6.32	7.56
	3SF 05 042 . 65	4265	2.51	3.55	**4.20**	4.35	5.61	6.64	7.94
	3SF 05 045 . 65	4565	2.69	3.80	**4.50**	4.66	6.01	7.12	8.50
	3SF 05 047 . 65	4765	2.81	3.97	**4.70**	4.86	6.28	7.43	8.88
	3SF 05 050 . 65	5065	3.00	4.24	**5.00**	5.20	6.71	7.94	9.49
	3SF 05 055 . 65	5565	3.28	4.64	**5.50**	5.68	7.33	8.68	10.37
	3SF 05 059 . 65	5965	3.50	4.95	**5.90**	6.06	7.83	9.26	11.07
	3SF 05 060 . 65	6065	3.59	5.07	**6.00**	6.21	8.02	9.49	11.34
	3SF 05 065 . 65	6565	3.88	5.49	**6.50**	6.73	8.69	10.28	12.28
	3SF 05 066 . 65	6665	3.94	5.58	**6.60**	6.83	8.82	10.44	12.47
	3SF 05 070 . 65	7065	4.18	5.92	**7.00**	7.25	9.35	11.07	13.23
	3SF 05 072 . 65	7265	4.30	6.09	**7.20**	7.45	9.62	11.38	13.61
	3SF 05 073 . 65	7365	4.36	6.17	**7.30**	7.56	9.76	11.54	13.80
	3SF 05 075 . 65	7565	4.48	6.34	**7.50**	7.76	10.02	11.86	14.17
	3SF 05 080 . 65	8065	4.78	6.76	**8.00**	8.28	10.69	12.65	15.12
	3SF 05 085 . 65	8565	5.08	7.18	**8.50**	8.80	11.36	13.44	16.06
	3SF 05 090 . 65	9065	5.40	7.64	**9.00**	9.35	12.07	14.29	17.08
	3SF 05 095 . 65	9565	5.68	8.03	**9.50**	9.83	12.69	15.02	17.95
	3SF 05 100 . 65	10065	5.98	8.45	**10.00**	10.35	13.36	15.81	18.90
	3SF 05 120 . 65	12065	7.17	10.14	**12.00**	12.42	16.04	18.97	22.68
	3SF 05 130 . 65	13065	7.77	10.99	**13.00**	13.46	17.37	20.56	24.57
	3SF 05 146 . 65	14665	8.73	12.34	**14.60**	15.11	19.51	23.08	27.59
	3SF 05 150 . 65	15065	8.96	12.67	**15.00**	15.52	20.04	23.71	28.33
	3SF 05 160 . 65	16065	9.55	13.51	**16.00**	16.54	21.35	25.27	30.20
	3SF 05 165 . 65	16565	9.86	13.95	**16.50**	17.08	22.05	26.09	31.18
	3SF 05 170 . 65	17065	10.16	14.37	**17.00**	17.60	22.72	26.88	32.13
70°	3SF 05 026 . 70	2670	1.55	2.20	**2.60**	2.69	3.47	4.11	4.91
	3SF 05 052 . 70	5270	3.11	4.39	**5.20**	5.38	6.95	8.22	9.83
	3SF 05 062 . 70	6270	3.71	5.24	**6.20**	6.42	8.29	9.80	11.72

Order No.: CODE . MATERIAL

Example: 3SF 05 040 . 065 . 038T . 1 Type 3SF 05 with mentioned Q(lpm)@P(bar), Spray angle: 65˚ , 3/8" BSPT, Brass

SPADFLOW
SPRAYING SYSTEMS AND NOZZLES

Axial Flow **Full-Cone** Spray Nozzles
Spadflow Series **3SF 05**

Webpage + STP

3SF 05

Spray angle	Code	General Code	Flow rate [l/min]						
			P [bar]						
			1.0 *K factor*	2.0	2.8	3.0	5.0	7.0	10
80˚	3SF 05 015 . 80	1580	0.90	1.27	**1.50**	1.56	2.01	2.38	2.85
	3SF 05 020 . 80	2080	1.20	1.69	**2.00**	2.07	2.67	3.16	3.78
	3SF 05 025 . 80	2580	1.49	2.11	**2.49**	2.58	3.33	3.94	4.71
	3SF 05 030 . 80	3080	1.79	2.54	**3.00**	3.11	4.01	4.74	5.67
	3SF 05 033 . 80	3380	1.96	2.77	**3.28**	3.39	4.38	5.19	6.20
	3SF 05 035 . 80	3580	2.09	2.96	**3.50**	3.62	4.68	5.53	6.61
	3SF 05 040 . 80	4080	2.39	3.38	**4.00**	4.14	5.35	6.32	7.56
	3SF 05 045 . 80	4580	2.69	3.80	**4.50**	4.66	6.01	7.12	8.50
	3SF 05 050 . 80	5080	2.99	4.23	**5.00**	5.18	6.68	7.91	9.45
	3SF 05 060 . 80	6080	3.59	5.07	**6.00**	6.21	8.02	9.49	11.34
	3SF 05 075 . 80	7580	4.50	6.36	**7.53**	7.79	10.06	11.91	14.23
	3SF 05 080 . 80	8080	4.78	6.76	**8.00**	8.28	10.69	12.65	15.12
	3SF 05 085 . 80	8580	5.08	7.18	**8.50**	8.80	11.36	13.44	16.06
	3SF 05 098 . 80	9880	5.86	8.28	**9.80**	10.14	13.10	15.50	18.52
	3SF 05 102 . 80	10280	6.10	8.62	**10.20**	10.56	13.63	16.13	19.28
	3SF 05 106 . 80	10680	6.33	8.96	**10.60**	10.97	14.16	16.76	20.03
	3SF 05 110 . 80	11080	6.57	9.30	**11.00**	11.39	14.70	17.39	20.79
	3SF 05 118 . 80	11880	7.05	9.97	**11.80**	12.21	15.77	18.66	22.30
	3SF 05 129 . 80	12980	7.71	10.90	**12.90**	13.35	17.24	20.40	24.38
	3SF 05 150 . 80	15080	8.96	12.68	**15.00**	15.53	20.04	23.72	28.35
	3SF 05 160 . 80	16080	9.56	13.52	**16.00**	16.56	21.38	25.30	30.24
90˚	3SF 05 015 . 90	1590	0.90	1.27	**1.50**	1.56	2.01	2.38	2.85
	3SF 05 020 . 90	2090	1.20	1.70	**2.00**	2.08	2.68	3.17	3.79
	3SF 05 025 . 90	2590	1.49	2.11	**2.50**	2.59	3.34	3.95	4.72
	3SF 05 030 . 90	3090	1.79	2.54	**3.00**	3.11	4.01	4.74	5.67
	3SF 05 035 . 90	3590	2.09	2.96	**3.50**	3.62	4.67	5.53	6.61
	3SF 05 038 . 90	3890	2.27	3.21	**3.80**	3.93	5.08	6.01	7.18
	3SF 05 040 . 90	4090	2.39	3.38	**4.00**	4.14	5.35	6.32	7.56
	3SF 05 045 . 90	4590	2.69	3.80	**4.50**	4.66	6.01	7.12	8.50
	3SF 05 046 . 90	4690	2.75	3.89	**4.60**	4.76	6.15	7.27	8.69
	3SF 05 050 . 90	5090	2.99	4.23	**5.00**	5.18	6.68	7.91	9.45
	3SF 05 055 . 90	5590	3.29	4.65	**5.50**	5.69	7.35	8.70	10.39
	3SF 05 060 . 90	6090	3.59	5.07	**6.00**	6.21	8.02	9.49	11.34
	3SF 05 065 . 90	6590	3.88	5.49	**6.50**	6.73	8.69	10.28	12.28
	3SF 05 074 . 90	7490	4.42	6.25	**7.40**	7.66	9.89	11.70	13.98
	3SF 05 080 . 90	8090	4.78	6.76	**8.00**	8.28	10.69	12.65	15.12
	3SF 05 090 . 90	9090	5.38	7.61	**9.00**	9.32	12.03	14.23	17.01
	3SF 05 095 . 90	9590	5.68	8.03	**9.50**	9.83	12.69	15.02	17.95
	3SF 05 100 . 90	10090	5.98	8.45	**10.00**	10.35	13.36	15.81	18.90
	3SF 05 110 . 90	11090	6.57	9.30	**11.00**	11.39	14.70	17.39	20.79
	3SF 05 120 . 90	12090	7.17	10.14	**12.00**	12.42	16.04	18.97	22.68
	3SF 05 146 . 90	14690	8.73	12.34	**14.60**	15.11	19.51	23.08	27.59

Order No.: CODE . MATERIAL

Example: 3SF 05 040 . 065 . 038T . 1 Type 3SF 05 with mentioned Q(lpm)@P(bar), Spray angle: 65˚ , 3/8" BSPT, Brass

SPADFLOW
SPRAYING SYSTEMS AND NOZZLES

Axial Flow **Full-Cone** Spray Nozzles
Spadflow Series **3L 490 – 3L 491**

Webpage + STP

3L 490
3L 491

Standard S-Type Nozzle

Applications:

- Cleaning and washing
- Surface spraying
- Container cleaning
- Foam precipitation
- Degassing of liquids

Properties:

- Non-clogging nozzle
- Very stable spray angle
- Even liquid distribution
- Large free cross sections

3L 490

3L 491

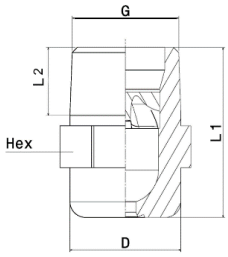

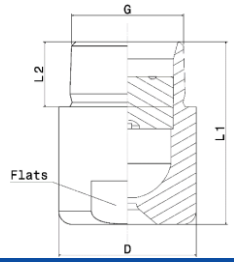

Size	Conn. code			Dimensions [mm]				Weight
	BSPT	BSPP	NPT	L_1	L_2	D	Hex/Flats	
1/8”	018T	018P	018N	18.0	6.5	10.0	11	13 g
1/4”	014T	014P	014N	22.0	10.0	13.0	14	16 g
3/8”	038T	038P	038N	24.5	10.0	16.0	17	30 g
3/8”	038T	038P	038N	30.0	10.0	16.0	17	50 g
1/2”	012T	012P	012N	32.5	13.0	21.0	22	60 g
1/2”	012T	012P	012N	43.5	13.0	21.0	22	85 g
3/4”	034T	034P	034N	42.0	15.0	32.0	27	190 g
1”	100T	100P	100N	56.0	17.0	40.0	36	350 g

Material*	Code
Brass	1
S.S.304	2
S.S.316	3

* Different materials are available upon request

α	Spray coverage @ 200 mm
45°	160
60°	220
90°	380-390
120°	680

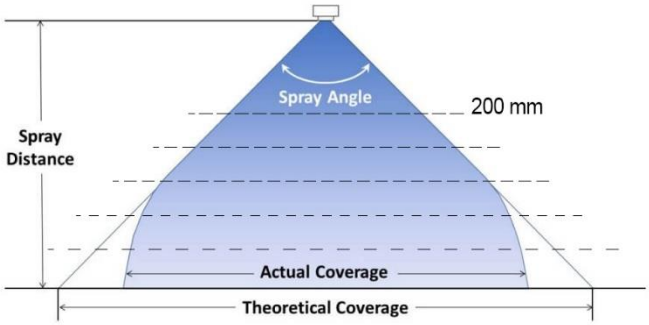

Spray angle (α)	Code	Connection** [inch]	B Ø [mm]	E Ø [mm]	Flow rate [l/min] P [bar] 0.5	1.0 K factor	2.0	3.0	5.0	7.0	10.0
45°	**3L 490 40 . 045**	**1/8"-1/4"**	1.25	1.25	0.57	0.76	**1.00**	1.18	1.44	1.65	1.90
	3L 490 52 . 045	**1/8"-1/4"**	1.70	1.70	1.15	1.52	**2.00**	2.35	2.89	3.30	3.81
	3L 490 60 . 045	**1/4"-3/8"**	2.00	2.00	1.81	2.39	**3.15**	3.70	4.54	5.20	6.00
	3L 490 64 . 045	**1/4"-3/8"**	2.45	2.45	2.30	3.03	**4.00**	4.70	5.77	6.60	7.61
	3L 490 68 . 045	**3/8"**	2.55	2.55	2.87	3.79	**5.00**	5.88	7.21	8.25	9.52
	3L 490 70 . 045	**3/8"**	2.65	2.65	3.22	4.24	**5.60**	6.59	8.08	9.24	10.66
	3L 490 72 . 045	**3/8"**	2.85	2.85	3.62	4.77	**6.30**	7.41	9.09	10.40	11.99
	3L 490 78 . 045	**1/2"**	3.45	3.45	5.17	6.82	**9.00**	10.58	12.98	14.85	17.12
	3L 490 84 . 045	**1/2"**	3.80	3.80	7.18	9.47	**12.50**	14.70	18.03	20.63	23.80
60°	**3L 490 40 . 060**	**1/8"-1/4"**	1.15	1.15	0.57	0.76	**1.00**	1.18	1.44	1.65	1.90
	3L 490 44 . 060	**1/8"-1/4"**	1.25	1.25	0.72	0.95	**1.25**	1.47	1.80	2.06	2.38

037– R01 – C00

Order No.: CODE . CONNETION . MATERIAL

Example: 3L 490 40 . 060 . 014T . 3 Type 3L 490 with mentioned Q(lpm)@P(bar), Spray angle: 60˚, 1/4” BSPT, S.S.316

SPADFLOW
SPRAYING SYSTEMS AND NOZZLES

Axial Flow **Full-Cone** Spray Nozzles
Spadflow Series **3L 490 – 3L 491**

Webpage + STP

3L 490
3L 491

Spray angle (α)	Code	Connection** [inch]	B Ø [mm]	E Ø [mm]	Flow rate [l/min] P [bar] 0.5	1.0 K factor	2.0	3.0	5.0	7.0	10.0
60°	3L 490 48 . 060	1/8"-1/4"	1.45	1.45	0.92	1.21	**1.60**	1.88	2.31	2.64	3.05
	3L 490 52 . 060	1/8"-1/4"	1.60	1.60	1.15	1.52	**2.00**	2.35	2.89	3.30	3.81
	3L 490 56 . 060	1/8"-1/4"	1.80	1.80	1.44	1.89	**2.50**	2.94	3.61	4.13	4.76
	3L 490 60 . 060	1/8"-1/4"-3/8"	2.05	2.05	1.81	2.39	**3.15**	3.70	4.54	5.20	6.00
	3L 490 64 . 060	1/4"-3/8"	2.30	2.30	2.30	3.03	**4.00**	4.70	5.77	6.60	7.61
	3L 490 68 . 060	1/4"-3/8"	2.60	2.60	2.87	3.79	**5.00**	5.88	7.21	8.25	9.52
	3L 490 72 . 060	1/4"-3/8"	2.95	2.80	3.62	4.77	**6.30**	7.41	9.09	10.40	11.99
	3L 490 76 . 060	3/8"	3.25	3.25	4.59	6.06	**8.00**	9.41	11.54	13.20	15.22
	3L 490 80 . 060	3/8"	3.70	3.70	5.74	7.58	**10.00**	11.76	14.43	16.51	19.04
	3L 490 84 . 060	1/2"	4.05	4.05	7.18	9.47	**12.50**	14.70	18.03	20.63	23.80
	3L 490 88 . 060	1/2"	4.65	4.65	9.19	12.13	**16.00**	18.82	23.08	26.41	30.46
	3L 490 92 . 060	3/4"	5.20	5.20	11.49	15.16	**20.00**	23.52	28.85	33.01	38.07
	3L 490 96 . 060	3/4"	5.80	5.80	14.36	18.95	**25.00**	29.40	36.07	41.26	47.59
	3L 491 04 . 060	1"	7.25	7.25	22.97	30.31	**40.00**	47.04	57.71	66.02	76.15
	3L 491 08 . 060	1"	8.15	8.15	28.72	37.89	**50.00**	58.80	72.14	82.53	95.18
90°	3L 490 40 . 090	1/8"-1/4"	1.20	1.20	0.57	0.76	**1.00**	1.18	1.44	1.65	1.90
	3L 490 44 . 090	1/8"-1/4"	1.30	1.30	0.72	0.95	**1.25**	1.47	1.80	2.06	2.38
	3L 490 48 . 090	1/8"-1/4"	1.45	1.45	0.92	1.21	**1.60**	1.88	2.31	2.64	3.05
	3L 490 52 . 090	1/8"-1/4"	1.70	1.55	1.15	1.52	**2.00**	2.35	2.89	3.30	3.81
	3L 490 56 . 090	1/8"-1/4"	1.90	1.90	1.44	1.89	**2.50**	2.94	3.61	4.13	4.76
	3L 490 60 . 090	1/8"-3/8"	2.10	2.05	1.81	2.39	**3.15**	3.70	4.54	5.20	6.00
	3L 490 64 . 090	1/4"-3/8"	2.40	2.40	2.30	3.03	**4.00**	4.70	5.77	6.60	7.61
	3L 490 68 . 090	1/4"-3/8"	2.70	2.70	2.87	3.79	**5.00**	5.88	7.21	8.25	9.52
	3L 490 72 . 090	1/4"-3/8"	3.20	2.80	3.62	4.77	**6.30**	7.41	9.09	10.40	11.99
	3L 490 74 . 090	3/8"	3.15	3.15	4.08	5.38	**7.10**	8.35	10.24	11.72	13.52
	3L 490 76 . 090	3/8"	3.40	3.40	4.59	6.06	**8.00**	9.41	11.54	13.20	15.22
	3L 490 80 . 090	3/8"	3.90	3.90	5.74	7.58	**10.00**	11.76	14.43	16.51	19.04
	3L 490 84 . 090	3/8"	4.65	4.00	7.18	9.47	**12.50**	14.70	18.03	20.63	23.80
	3L 490 88 . 090	1/2"	5.45	4.50	9.19	12.13	**16.00**	18.82	23.08	26.41	30.46
	3L 490 92 . 090	1/2"	5.90	4.50	11.49	15.16	**20.00**	23.52	28.85	33.01	38.07
	3L 490 96 . 090	*1/2"-3/4"*	6.55	4.85	14.36	18.95	**25.00**	29.40	36.07	41.26	47.59
	3L 491 00 . 090	3/4"	7.55	5.50	18.09	23.87	**31.50**	37.05	45.45	51.99	59.97
	3L 491 04 . 090	3/4"	8.60	6.60	22.97	30.31	**40.00**	47.04	57.71	66.02	76.15
	3L 491 08 . 090	1"	9.45	7.25	28.72	37.89	**50.00**	58.80	72.14	82.53	95.18
	3L 491 12 . 090	1"	10.40	8.00	36.18	47.75	**63.00**	74.09	90.89	103.98	119.93
	3L 491 14 . 090	1"	11.00	7.50	40.78	53.81	**71.00**	83.50	102.43	117.19	135.16
120°	3L 490 36 . 120	1/8"-1/4"	0.85	0.65	0.36	0.48	**0.63**	0.74	0.91	1.04	1.20
	3L 490 40 . 120	1/8"-1/4"	1.20	1.20	0.57	0.76	**1.00**	1.18	1.44	1.65	1.90
	3L 490 44 . 120	1/8"-1/4"	1.30	1.30	0.72	0.95	**1.25**	1.47	1.80	2.06	2.38
	3L 490 48 . 120	1/8"-1/4"	1.45	1.45	0.92	1.21	**1.60**	1.88	2.31	2.64	3.05
	3L 490 52 . 120	1/8"-1/4"	1.70	1.70	1.15	1.52	**2.00**	2.35	2.89	3.30	3.81
	3L 490 56 . 120	1/8"-1/4"	1.90	1.90	1.44	1.89	**2.50**	2.94	3.61	4.13	4.76
	3L 490 60 . 120	1/8"-1/4"	2.10	2.05	1.81	2.39	**3.15**	3.70	4.54	5.20	6.00
	3L 490 64 . 120	1/4"-3/8"	2.40	2.40	2.30	3.03	**4.00**	4.70	5.77	6.60	7.61
	3L 490 68 . 120	1/4"-3/8"	2.75	2.75	2.87	3.79	**5.00**	5.88	7.21	8.25	9.52
	3L 490 72 . 120	1/4"-3/8"	3.20	2.80	3.62	4.77	**6.30**	7.41	9.09	10.40	11.99
	3L 490 74 . 120	3/8"	3.20	3.20	4.08	5.38	**7.10**	8.35	10.24	11.72	13.52
	3L 490 76 . 120	3/8"	3.45	3.45	4.59	6.44	**8.00**	9.41	11.54	13.20	15.22
	3L 490 80 . 120	3/8"	3.90	3.90	5.74	7.58	**10.00**	11.76	14.43	16.51	19.04
	3L 490 84 . 120	*3/8"*	4.70	4.00	7.18	9.47	**12.50**	14.70	18.03	20.63	23.80
	3L 490 88 . 120	1/2"	5.10	4.50	9.19	12.13	**16.00**	18.82	23.08	26.41	30.46
	3L 490 92 . 120	1/2"	5.80	4.75	11.49	15.16	**20.00**	23.52	28.85	33.01	38.07
	3L 490 96 . 120	*1/2"-3/4"*	6.65	4.85	14.36	18.95	**25.00**	29.40	36.07	41.26	47.59
	3L 491 04 . 120	3/4"	9.20	5.85	22.97	30.31	**40.00**	47.04	57.71	66.02	76.15
	3L 491 12 . 120	1"	10.80	7.75	36.18	47.75	**63.00**	74.09	90.89	103.98	119.93
	3L 491 14 . 120	1"	11.40	7.65	40.78	53.81	**71.00**	83.50	102.43	117.19	135.16

** Different connection sizes are available upon request
B = bore diameter E = narrowest free cross section

Order No.: CODE . CONNETION . MATERIAL

Example: 3L 490 40 . 060 . 014T . 3 Type 3L 490 with mentioned Q(lpm)@P(bar), Spray angle: 60°, 1/4" BSPT, S.S.316

SPADFLOW
SPRAYING SYSTEMS AND NOZZLES

Axial Flow **Full-Cone** Spray Nozzles
Spadflow Series **3L460 – 3L461**

Webpage + STP

3L 460
3L 461

Standard X-type Nozzle

Applications:

- Cleaning and washing
- Cooling of gaseous fluids and solids
- Surface spraying
- Spraying onto mats in air washers
- Improving of chemical reactions

Properties:

- Very uniform spray pattern
- Large free cross-sections
- Optimized x-style swirl inserts

3L 460

3L 461

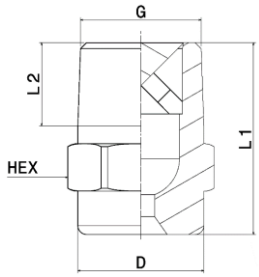

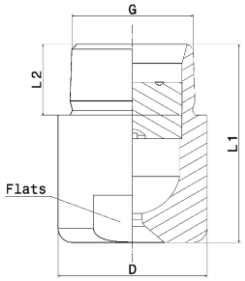

Size	Conn. code			Dimensions [mm]				Weight
	BSPT	BSPP	NPT	L_1	L_2	D	Hex/Flats	
1/8”	018T	018P	018N	18.0	6.5	10.0	11	15 g
1/4”	014T	014P	014N	22.0	10.0	13.0	14	17 g
3/8”	038T	038P	038N	24.5	10.0	16.0	17	30 g
3/8”	038T	038P	038N	30.0	10.0	16.0	17	50 g
1/2”	012T	012P	012N	32.5	13.0	21.0	22	67 g
1/2”	012T	012P	012N	43.5	13.0	21.0	22	85 g
3/4”	034T	034P	034N	42.0	15.0	32.0	27	170 g
3/4”	034T	034P	034N	50.0	15.0	32.0	27	200 g
1”	100T	100P	100N	56.0	17.0	40.0	36	360 g

Material*	Code
Brass	1
S.S.304	2
S.S.316	3

* Different materials are available upon request

α	Spray coverage @ 200 mm
45°	160
60°	220
90°	380-390
120°	680

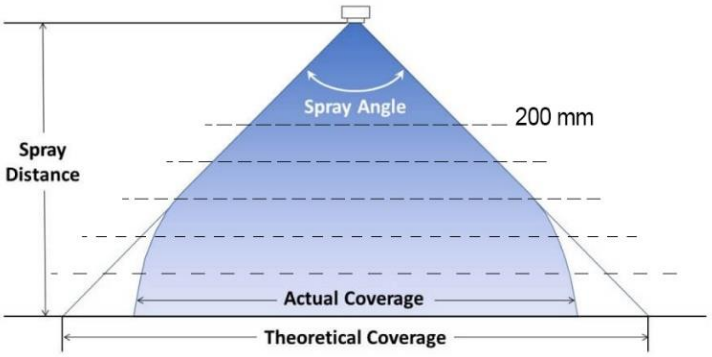

Spray angle (α)	Code	Connection** [inch]	B Ø [mm]	E Ø [mm]	Flow rate [l/min] P [bar] 0.5	1.0 K factor	2.0	3.0	5.0	7.0	10.0
45°	**3L 460 40 . 045**	**1/8"-1/4"**	1.20	0.85	0.57	0.76	**1.00**	1.18	1.44	1.65	1.90
	3L 460 52 . 045	**1/8"-1/4"**	1.50	1.35	1.15	1.52	**2.00**	2.35	2.89	3.30	3.81
	3L 460 60 . 045	**1/4"-3/8"**	1.90	1.80	1.81	2.39	**3.15**	3.70	4.54	5.20	6.00
	3L 460 64 . 045	**1/4"-3/8"**	2.15	2.00	2.30	3.03	**4.00**	4.70	5.77	6.60	7.61
	3L 460 68 . 045	**1/4"-3/8"**	2.40	2.00	2.87	3.79	**5.00**	5.88	7.21	8.25	9.52
	3L 460 70 . 045	**3/8"**	2.55	2.20	3.22	4.24	**5.60**	6.59	8.08	9.24	10.66
	3L 460 72 . 045	**3/8"**	2.70	2.35	3.62	4.77	**6.30**	7.41	9.09	10.40	11.99
	3L 460 78 . 045	**1/2"**	3.20	3.20	5.17	6.82	**9.00**	10.58	12.98	14.85	17.12
	3L 460 84 . 045	**1/2"**	3.80	3.70	7.18	9.47	**12.50**	14.70	18.03	20.63	23.80

037– R01 – C01

Order No.: CODE . CONNETION . MATERIAL

Example: 3L 460 40 . 060 . 014T . 3 Type 3L460 with mentioned Q(lpm)@P(bar), Spray angle: 60˚, 1/4” BSPT, S.S.316

SPADFLOW
SPRAYING SYSTEMS AND NOZZLES

Axial Flow **Full-Cone** Spray Nozzles
Spadflow Series **3L460 – 3L461**

Webpage + STP

3L 460
3L 461

Spray angle (α)	Code	Connection** [inch]	B Ø [mm]	E Ø [mm]	Flow rate [l/min] P [bar] 0.5	1.0 K factor	2.0	3.0	5.0	7.0	10.0
60°	3L 460 40 . 060	1/8"-1/4"	1.20	0.85	0.57	0.76	**1.00**	1.18	1.44	1.65	1.90
	3L 460 44 . 060	1/8"-1/4"	1.30	1.05	0.72	0.95	**1.25**	1.47	1.80	2.06	2.38
	3L 460 48 . 060	1/8"-1/4"	1.45	1.15	0.92	1.21	**1.60**	1.88	2.31	2.64	3.05
	3L 460 52 . 060	1/8"-1/4"	1.60	1.20	1.15	1.52	**2.00**	2.35	2.89	3.30	3.81
	3L 460 60 . 060	1/8"-1/4"-3/8"	2.05	1.40	1.81	2.39	**3.15**	3.70	4.54	5.20	6.00
	3L 460 64 . 060	1/4"-3/8"	2.40	1.90	2.30	3.03	**4.00**	4.70	5.77	6.60	7.61
	3L 460 68 . 060	1/4"-3/8"	2.60	2.00	2.87	3.79	**5.00**	5.88	7.21	8.25	9.52
	3L 460 72 . 060	1/4"-3/8"	2.90	2.00	3.62	4.77	**6.30**	7.41	9.09	10.40	11.99
	3L 460 76 . 060	3/8"	3.25	2.85	4.59	6.06	**8.00**	9.41	11.54	13.20	15.22
	3L 460 80 . 060	3/8"	3.60	2.95	5.74	7.58	**10.00**	11.76	14.43	16.51	19.04
	3L 460 84 . 060	1/2"	4.00	3.30	7.18	9.47	**12.50**	14.70	18.03	20.63	23.80
	3L 460 88 . 060	1/2"	4.50	3.70	9.19	12.13	**16.00**	18.82	23.08	26.41	30.46
	3L 460 92 . 060	3/4"	5.20	4.50	11.49	15.16	**20.00**	23.52	28.85	33.01	38.07
	3L 460 96 . 060	3/4"	5.80	4.90	14.36	18.95	**25.00**	29.40	36.07	41.26	47.59
	3L 461 04 . 060	1"	7.20	5.40	22.97	30.31	**40.00**	47.04	57.71	66.02	76.15
	3L 461 08 . 060	1"	8.60	6.50	28.72	37.89	**50.00**	58.80	72.14	82.53	95.18
90°	3L 460 32 . 090	1/8"-1/4"	0.80	0.55	0.23	0.30	**0.40**	0.47	0.58	0.66	0.76
	3L 460 40 . 090	1/8"-1/4"	1.20	0.85	0.57	0.76	**1.00**	1.18	1.44	1.65	1.90
	3L 460 44 . 090	1/8"-1/4"	1.30	1.00	0.72	0.95	**1.25**	1.47	1.80	2.06	2.38
	3L 460 48 . 090	1/8"-1/4"	1.45	1.20	0.92	1.21	**1.60**	1.88	2.31	2.64	3.05
	3L 460 52 . 090	1/8"-1/4"	1.65	1.30	1.15	1.52	**2.00**	2.35	2.89	3.30	3.81
	3L 460 56 . 090	1/8"-1/4"	1.85	1.30	1.44	1.89	**2.50**	2.94	3.61	4.13	4.76
	3L 460 60 . 090	1/8"-3/8"	2.05	1.45	1.81	2.39	**3.15**	3.70	4.54	5.20	6.00
	3L 460 64 . 090	1/4"-3/8"	2.30	1.80	2.30	3.03	**4.00**	4.70	5.77	6.60	7.61
	3L 460 68 . 090	1/4"-3/8"	2.60	1.80	2.87	3.79	**5.00**	5.88	7.21	8.25	9.52
	3L 460 72 . 090	1/4"-3/8"	2.95	2.00	3.62	4.77	**6.30**	7.41	9.09	10.40	11.99
	3L 460 74 . 090	3/8"	3.30	1.90	4.08	5.38	**7.10**	8.35	10.24	11.72	13.52
	3L 460 76 . 090	3/8"	3.30	2.40	4.59	6.06	**8.00**	9.41	11.54	13.20	15.22
	3L 460 80 . 090	3/8"	3.70	2.70	5.74	7.58	**10.00**	11.76	14.43	16.51	19.04
	3L 460 84 . 090	3/8"	4.05	3.20	7.18	9.47	**12.50**	14.70	18.03	20.63	23.80
	3L 460 88 . 090	1/2"	4.70	3.10	9.19	12.13	**16.00**	18.82	23.08	26.41	30.46
	3L 460 92 . 090	1/2"	5.20	3.80	11.49	15.16	**20.00**	23.52	28.85	33.01	38.07
	3L 460 96 . 090	1/2"-3/4"	5.80	3.80	14.36	18.95	**25.00**	29.40	36.07	41.26	47.59
	3L 461 00 . 090	1/2"-3/4"	6.40	3.80	18.09	23.87	**31.50**	37.05	45.45	51.99	59.97
	3L 461 04 . 090	3/4"	7.20	5.30	22.97	30.31	**40.00**	47.04	57.71	66.02	76.15
	3L 461 08 . 090	3/4"-1"	8.20	5.30	28.72	37.89	**50.00**	58.80	72.14	82.53	95.18
	3L 461 12 . 090	1"	9.30	6.50	36.18	47.75	**63.00**	74.09	90.89	103.98	119.93
	3L 461 14 . 090	1"	9.90	6.70	40.78	53.81	**71.00**	83.50	102.43	117.19	135.16
120°	3L 460 36 . 120	1/8"-1/4"	0.95	0.70	0.36	0.48	**0.63**	0.74	0.91	1.04	1.20
	3L 460 40 . 120	1/8"-1/4"	1.20	0.85	0.57	0.76	**1.00**	1.18	1.44	1.65	1.90
	3L 460 44 . 120	1/8"-1/4"	1.30	0.90	0.72	0.95	**1.25**	1.47	1.80	2.06	2.38
	3L 460 48 . 120	1/8"-1/4"	1.50	1.00	0.92	1.21	**1.60**	1.88	2.31	2.64	3.05
	3L 460 52 . 120	1/8"-1/4"	1.65	1.20	1.15	1.52	**2.00**	2.35	2.89	3.30	3.81
	3L 460 56 . 120	1/8"-1/4"	1.90	1.35	1.44	1.89	**2.50**	2.94	3.61	4.13	4.76
	3L 460 60 . 120	1/8"-1/4"	2.10	1.40	1.81	2.39	**3.15**	3.70	4.54	5.20	6.00
	3L 460 64 . 120	1/4"-3/8"	2.45	1.60	2.30	3.03	**4.00**	4.70	5.77	6.60	7.61
	3L 460 68 . 120	1/4"-3/8"	2.75	1.80	2.87	3.79	**5.00**	5.88	7.21	8.25	9.52
	3L 460 72 . 120	1/4"-3/8"	3.10	1.90	3.62	4.77	**6.30**	7.41	9.09	10.40	11.99
	3L 460 74 . 120	3/8"	3.30	1.90	4.08	5.38	**7.10**	8.35	10.24	11.72	13.52
	3L 460 76 . 120	3/8"	3.50	1.90	4.59	6.44	**8.00**	9.41	11.54	13.20	15.22
	3L 460 80 . 120	3/8"	3.80	2.40	5.74	7.58	**10.00**	11.76	14.43	16.51	19.04
	3L 460 84 . 120	3/8"	4.20	2.70	7.18	9.47	**12.50**	14.70	18.03	20.63	23.80
	3L 460 88 . 120	1/2"	4.60	3.10	9.19	12.13	**16.00**	18.82	23.08	26.41	30.46
	3L 460 92 . 120	1/2"	5.30	3.30	11.49	15.16	**20.00**	23.52	28.85	33.01	38.07
	3L 460 96 . 120	1/2"-3/4"	5.90	4.10	14.36	18.95	**25.00**	29.40	36.07	41.26	47.59
	3L 461 04 . 120	3/4"	7.60	4.90	22.97	30.31	**40.00**	47.04	57.71	66.02	76.15
	3L 461 12 . 120	1"	9.60	6.60	36.18	47.75	**63.00**	74.09	90.89	103.98	119.93
	3L 461 14 . 120	1"	10.00	6.60	40.78	53.81	**71.00**	83.50	102.43	117.19	135.16

** Different connection sizes are available upon request
B = bore diameter E = narrowest free cross section

Order No.: CODE . CONNETION . MATERIAL

Example: 3L 460 40 . 060 . 014T . 3 Type 3L460 with mentioned Q(lpm)@P(bar), Spray angle: 60˚, 1/4" BSPT, S.S.316

SPADFLOW
SPRAYING SYSTEMS AND NOZZLES

Axial Flow **Full-Cone** Spray Nozzles
Spadflow Series **3L 405**

Webpage + STP

3L 405

High Flow Full-Cone Nozzle

Applications:

- Cleaning and washing
- Surface spraying
- Spraying over packings
- Chemical process engineering
- Cooling of gaseous fluids and solids
- Water treatment

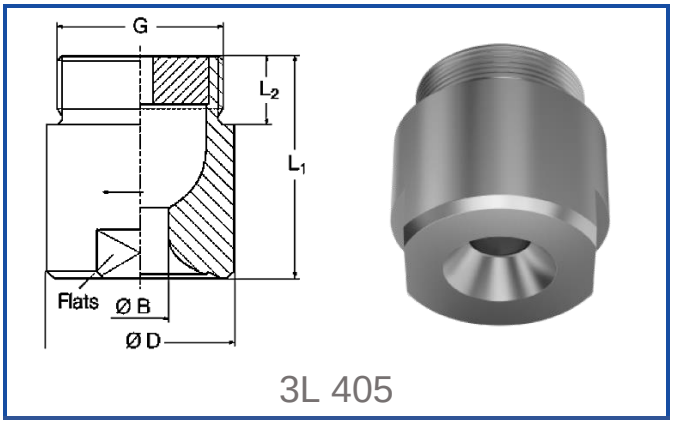

Properties:

- Very uniform spray pattern

Size	Conn. code			Dimensions [mm]				Weight
	BSPT	BSPP	NPT	L_1	L_2	D	Flats	
1 1/4"	114T	114P	114N	50.0	19.0	49.0	41	500 g
1 1/2"	112T	112P	112N	60.0	19.0	59.0	50	900 g
2"	200T	200P	200N	78.0	24.0	68.0	60	1600 g

Material*	Code
Brass	1
S.S.304	2
S.S.316	3

* Different materials are available upon request

α	Spray coverage @ 500 mm
60°	560-580
90°	780-850
120°	1450-1500

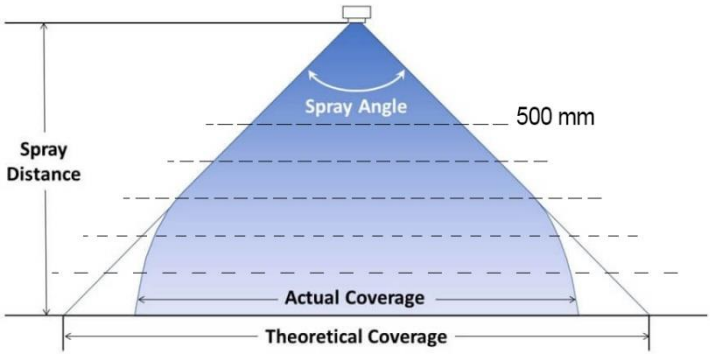

Spray angle (α)	Code	Connection** [inch]	B Ø [mm]	E Ø [mm]	Flow rate [l/min] P [bar] 0.3	0.5	1.0 K factor	2.0	3.0	5.0
60°	3L 405 20 . 060	1 1/4"	11.20	5.80	47	57	76	100	118	144
	3L 405 28 . 060	1 1/2"	14.30	7.00	75	92	121	160	188	231
	3L 405 32 . 060	2"	16.40	7.50	94	115	152	200	235	289
	3L 405 36 . 060	2"	18.40	8.50	117	144	189	250	294	361
	3L 405 40 . 060	2"	20.00	7.00	147	181	239	315	370	454
90°	3L 405 20 . 090	1 1/4"	12.00	5.00	47	57	76	100	118	144
	3L 405 28 . 090	1 1/2"	15.20	6.20	75	92	121	160	188	231
	3L 405 32 . 090	2"	17.20	7.70	94	115	152	200	235	289
	3L 405 36 . 090	2"	19.50	8.70	117	144	189	250	294	361
	3L 405 40 . 090	2"	22.00	9.50	147	181	239	315	370	454
120°	3L 405 20 . 120	1 1/4"	12.70	5.00	47	57	76	100	118	144
	3L 405 28 . 120	1 1/2"	16.00	6.60	75	92	121	160	188	231
	3L 405 32 . 120	2"	17.80	7.90	94	115	152	200	235	289
	3L 405 36 . 120	2"	20.10	8.80	117	144	189	250	294	361
	3L 405 40 . 120	2"	22.40	9.10	147	181	239	315	370	454

** Different connection sizes are available upon request
B = bore diameter E = narrowest free cross section

037– R01 – C00

Order No.: CODE . CONNETION . MATERIAL

Example: 3L 405 . 20 . 060 . 114T . 3 Type 3L 405 with mentioned Q(lpm)@P(bar), Spray angle: 60˚, 1 1/4" BSPT, S.S.316

SPADFLOW
SPRAYING SYSTEMS AND NOZZLES

Axial Flow **Full-Cone** Spray Nozzles
Spadflow Series **3L 403**

Webpage + STP

3L 403

Very High Flow Full-Cone Nozzle

Applications:

- Surface spraying
- Spraying over packings
- Chemical process engineering
- Cooling of gaseous fluids and solids
- Cleaning and washing process

Properties:

- Very uniform spray pattern

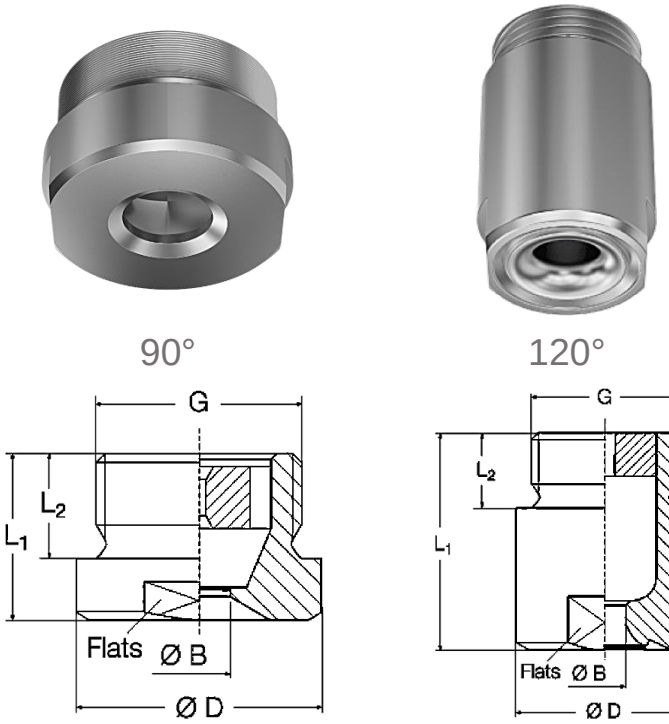

Version	Size	Conn. code			Dimensions [mm]				Weight
		BSPT	BSPP	NPT	L_1	L_2	D	Flats	
90°	2 1/2”	212T	212P	212N	52	27	83	75	1,300 g
	3”	300T	300P	300N	60	30	98	85	2,000 g
	3 1/2”	312T	312P	312N	70	32	118	105	3,600 g

90° version

Version	Size	Conn. code			Dimensions [mm]				Weight
		BSPT	BSPP	NPT	L_1	L_2	D	Flats	
120°	2 1/2”	212T	212P	212N	124	27	83	75	3,200 g
	3”	300T	300P	300N	153	30	98	85	5,400 g
	3 1/2”	312T	312P	312N	156	32	118	105	8,300 g
	4”	400T	400P	400N	165	36	128	110	9,600 g

120° version

Material*	Code
Brass	1
S.S.304	2
S.S.316	3

* Different materials are available upon request

α	Spray coverage @ 500 mm
90°	900-980
120°	1500-1600

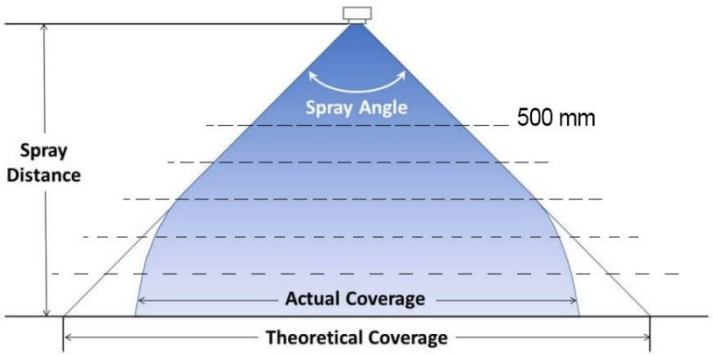

037– R01 – C00

Order No.: CODE . CONNECTION . MATERIAL

Example: 3L 403 44 . 090 . 212T . 3 Type 3L 403 with mentioned Q(lpm)@P(bar), Spray angle: 90˚, 2 1/2” BSPT, S.S.316

Axial Flow **Full-Cone** Spray Nozzles
Spadflow Series **3L 403**

Webpage + STP

Spray angle (α)	Code	Connection** [inch]	B Ø [mm]	E Ø [mm]	Flow rate [l/min] P [bar] 0.3	0.5	1.0 *K factor*	2.0	3.0	5.0	7.0
90°	**3L 403 44 . 090**	**2 1/2"**	25.00	12.00	187	230	303	400	470	577	660
	3L 403 48 . 090	**2 1/2"**	29.50	12.00	234	287	379	500	588	721	825
	3L 403 52 . 090	**3"**	32.00	13.80	295	362	477	630	741	909	1,040
	3L 403 60 . 090	**3 1/2"**	40.00	15.00	468	574	758	1,000	1,176	1,443	1,651
120°	**3L 403 44 . 120**	**2 1/2"**	25.50	10.00	187	230	303	400	470	577	660
	3L 403 48 . 120	**2 1/2"**	29.50	11.00	234	287	379	500	588	721	825
	3L 403 52 . 120	**3"**	32.00	15.00	295	362	477	630	741	909	1,040
	3L 403 60 . 120	**3 1/2"**	42.00	12.00	469	574	758	1,000	1,176	1,443	1,651
	3L 403 62 . 120	**4"**	45.00	15.00	585	718	947	1,250	1,470	1,903	2,063

** Different connection sizes are available upon request
B = bore diameter E = narrowest free cross section

Order No.: CODE . CONNECTION . MATERIAL

Example: 3L 403 44 . 090 . 212T . 3 Type 3L 403 with mentioned Q(lpm)@P(bar), Spray angle: 90˚, 2 1/2" BSPT, S.S.316

SPADFLOW
SPRAYING SYSTEMS AND NOZZLES

Tangential Flow **Full-Cone** Spray Nozzles
Spadflow Series **3L 422 – 3L 423**

Webpage + STP

3L 422
3L 423

Tangential Full-Cone Nozzle

Applications:

- Cleaning and washing processes
- Cooling of gaseous fluids and solids
- Surface spraying
- Spraying onto mats in air washers
- Improving on chemical reactions
- Continuous casting
- Foam control

Properties:

- Tangentially arranged liquid supply
- Without swirl inserts
- Non-clogging
- Stable spray angle
- Uniform spray

3L 422

3L 423

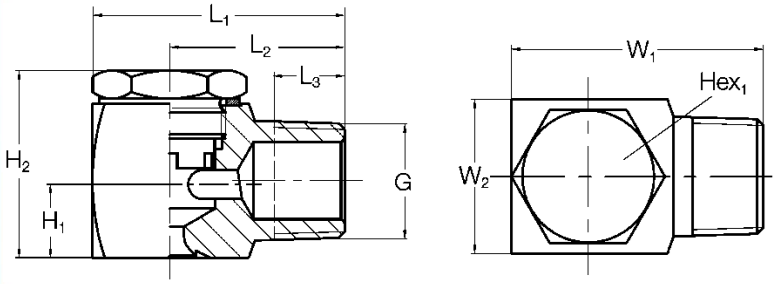

3L 422

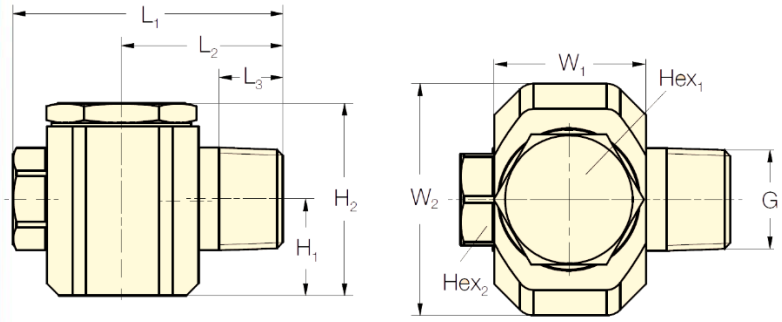

3L 423

Size	Conn. code			Dimensions [mm]									Weight
	BSPT	BSPP	NPT	L_1	L_2	L_3	H_1	H_2	W_1	W_2	Hex_1	Hex_2	S.S.316L
1/4”	014T	014P	014N	28.0	20.0	9.7	8.0	21.0	15.6	16.0	11	-	44 g
3/8”	038T	038P	038N	36.0	25.0	10.1	11.0	26.7	23.2	22.0	19	-	101 g
1/2”	012T	012P	012N	56.0	33.5	13.2	20.0	40.0	32.0	48.0	27	19	370 g
3/4”	034T	034P	034N	65.5	38.5	14.5	23.5	57.0	40.0	63.0	36	27	830 g
1”	100T	100P	100N	85.0	48.5	16.8	27.3	66.0	55.0	78.0	41	36	1,581 g

Material*	Code
Brass	1
S.S.304	2
S.S.316	3

* Different materials are available upon request

α	Spray coverage @ 200 mm
60°	225
90°	380-390
120°	680

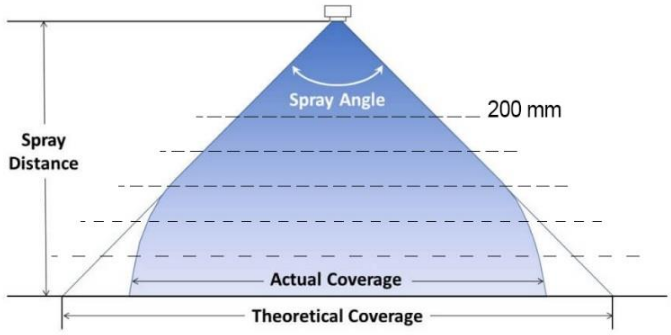

037– R01 – C00

Order No.: CODE . CONNETION . MATERIAL

Example: 3L 422 64 . 060 . 038T . 3 Type 3L 422 with mentioned Q(lpm)@P(bar), Spray angle: 60˚, 3/8” BSPT, S.S.316

Tangential Flow **Full-Cone** Spray Nozzles
Spadflow Series **3L 422 – 3L 423**

Webpage + STP

Spray angle (α)	Code	Connection** [inch]	B Ø [mm]	E Ø [mm]	Flow rate [l/min] P [bar] 0.5	1.0 K factor	2.0	3.0	5.0	10.0
60°	3L 422 64 . 060	3/8"	3.00	3.00	2.00	2.83	**4.00**	4.90	6.32	8.94
90°	3L 422 40 . 090	1/4"	1.40	1.40	0.50	0.71	**1.00**	1.22	1.58	2.24
	3L 422 48 . 090	1/4"	1.85	1.85	0.80	1.13	**1.60**	1.96	2.53	3.58
	3L 422 56 . 090	1/4"	2.25	2.25	1.25	1.77	**2.50**	3.06	3.95	5.59
	3L 422 60 . 090	3/8"	2.55	2.55	1.57	2.23	**3.15**	3.86	4.98	7.04
	3L 422 64 . 090	3/8"	2.90	2.90	2.00	2.83	**4.00**	4.90	6.32	8.94
	3L 422 72 . 090	3/8"	3.70	3.70	3.15	4.45	**6.30**	7.72	9.96	14.09
	3L 422 76 . 090	3/8"	4.15	4.15	4.00	5.66	**8.00**	9.80	12.65	17.89
	3L 422 80 . 090	3/8"	4.65	4.65	5.00	7.07	**10.00**	12.25	15.81	22.36
	3L 422 84 . 090	3/8"	5.30	5.30	6.25	8.84	**12.50**	15.31	19.76	27.95
	3L 422 88 . 090	3/8"	5.85	6.00	8.00	11.31	**16.00**	19.60	25.30	35.78
	3L 422 96 . 090	1/2"	8.00	8.00	12.50	17.68	**25.00**	30.62	39.53	55.90
120°	3L 422 48 . 120	1/4"	1.90	1.90	0.80	1.13	**1.60**	1.96	2.53	3.58
	3L 422 56 . 120	1/4"	2.45	2.40	1.25	1.77	**2.50**	3.06	3.95	5.59
	3L 422 60 . 120	3/8"	2.70	2.70	1.57	2.23	**3.15**	3.86	4.98	7.04
	3L 422 72 . 120	3/8"	4.00	3.90	3.15	4.45	**6.30**	7.72	9.96	14.09
	3L 422 80 . 120	3/8"	4.90	4.90	5.00	7.07	**10.00**	12.25	15.81	22.36
	3L 422 84 . 120	3/8"	5.30	5.30	6.25	8.84	**12.50**	15.31	19.76	27.95
	3L 422 88 . 120	3/8"	6.60	6.00	8.00	11.31	**16.00**	19.60	25.30	35.78
	3L 422 92 . 120	1/2"	7.30	7.30	10.00	14.14	**20.00**	24.49	31.62	44.72
	3L 422 96 . 120	1/2"	8.00	8.00	12.50	17.68	**25.00**	30.62	39.53	55.90
	3L 423 00 . 120	1/2"	8.70	8.70	15.75	22.27	**31.50**	38.88	49.81	70.44
	3L 423 12 . 120	3/4"	12.70	12.30	31.50	44.55	**63.00**	77.16	99.61	140.87
	3L 423 20 . 120	1"	17.00	16.00	50.00	70.71	**100.00**	122.47	158.11	223.61

** Different connection sizes are available upon request
B = bore diameter E = narrowest free cross section

Order No.: CODE . CONNETION . MATERIAL

Example: 3L 422 64 . 060 . 038T . 3 Type 3L 422 with mentioned Q(lpm)@P(bar), Spray angle: 60˚, 3/8" BSPT, S.S.316

SPADFLOW
SPRAYING SYSTEMS AND NOZZLES

Spiral **Full-Cone** Spray Nozzles
Spadflow Series **3B TF**

Webpage + STP

3B TF

Spiral Full-Cone Nozzle

Applications:

- Scrub hydrofluoric acid, ammonia, and other highly soluble gases
- Aerate waste water treatment, fish ponds, and impoundment ponds
- Process cooling for food, chemical, and industrial processes
- Various cooling setups
- Dust control
- Fire protection
- Humidification
- Quenching
- Scrubbing

Properties:

- High energy efficiency
- One-piece/no internal parts
- Clog-resistant performance
- High discharge velocity
- Fine atomization

3B TF

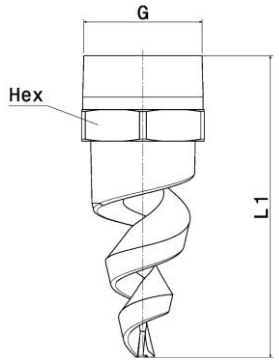

Size	K factor	Conn. code			Dimensions [mm]			Weight (g) (metal)
		BSPT	BSPP	NPT	L_1	L_2	Hex	
1/8	3.19	1/8T	1/8P	1/8N	42.9	42.9	14.3	28
1/8	5.93	1/8T	1/8P	1/8N	42.9	55.6	14.3	28
1/4	3.19	1/4T	1/4P	1/4N	47.6	47.6	14.3	35
1/4	3.19<	1/4T	1/4P	1/4N	47.6	60.3	14.3	35
3/8	all	3/8T	3/8P	3/8N	47.6	60.5	17.5	46
1/2	all	1/2T	1/2P	1/2N	63.5	77.7	22.2	85
3/4	95.7	3/4T	3/4P	3/4N	69.9	88.9	28.6	156
1	all	1T	1P	1N	92.1	111	34.9	241
1 1/2	<438	1 1/2T	1 1/2P	1 1/2N	111	137	50.8	624
1 1/2	438	1 1/2T	1 1/2P	1 1/2N	111	143	50.8	624
2	638	2T	2P	2N	143	175	63.5	1300
2	806	2T	2P	2N	176	178	63.5	1530
3	all	3T	3P	3N	219	235	88.9	3230
4	2390	4T	4P	4N	257	-	114	4790

Material*	Code
Brass	1
S.S.304	2
S.S.316	3

* Different materials are available upon request

α	Spray coverage @ 200 mm
45°	160
60°	220
90°	380-390
120°	680

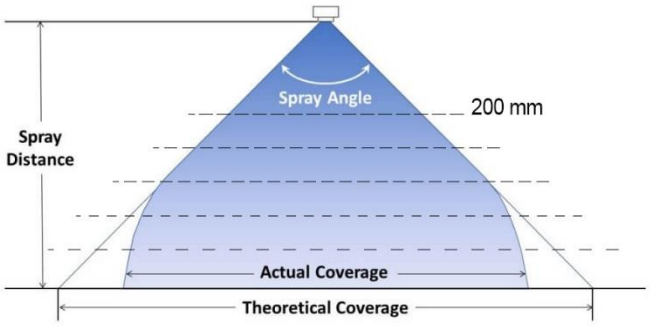

037– R01 – C00

Order No.: CODE . CONNETION . MATERIAL

Example: 3B TF 06 . 060 . 014T . 3 Type 3B TF with mentioned Q(lpm)@P(bar), Spray angle: 60˚, 1/4” BSPT, S.S.316

SPADFLOW
SPRAYING SYSTEMS AND NOZZLES

Spiral **Full-Cone** Spray Nozzles
Spadflow Series **3B TF**

Webpage + STP

3B TF

Spray angle (α)	Code	Connection** [inch]	B Ø [mm]	E Ø [mm]	Flow rate [l/min] P [bar] 0.5	0.7	1.0 K factor	2.0	3.0	5.0	10.0	20.0
60°	3B TF 06 . 060	1/8"-1/4"-3/8"	2.38	2.38	2.26	2.67	3.19	**4.5**	5.5	7.1	10.1	14.3
	3B TF 08 . 060	1/8"-1/4"-3/8"	3.18	3.18	4.19	4.96	5.93	**8.4**	10.3	13.2	18.7	26.5
	3B TF 10 . 060	1/4"-3/8"	3.97	3.18	6.45	7.63	9.12	**12.9**	15.8	20.4	28.8	40.8
	3B TF 12 . 060	3/8"	4.76	3.18	9.67	11.4	13.7	**19.3**	23.7	30.6	43.2	61.1
	3B TF 14 . 060	3/8"	5.56	3.18	13.1	15.4	18.5	**26.1**	32.0	41.3	58.4	82.6
	3B TF 16 . 060	3/8"	6.35	3.18	17.1	20.2	24.2	**34.2**	41.8	54.0	76.4	108
	3B TF 20 . 060	3/8"	7.94	3.18	26.6	31.5	37.6	**53.2**	65.1	84.1	119	168
	3B TF 24 . 060	1/2"	9.53	4.76	38.8	46.0	54.9	**77.7**	95.1	123	174	246
	3B TF 28 . 060	1/2"	11.1	4.76	53.2	62.9	75.2	**106**	130	168	238	336
	3B TF 32 . 060	3/4"	12.7	4.76	67.7	80.1	95.7	**135**	166	214	303	428
	3B TF 40 . 060	1"	15.9	6.35	108	128	153	**216**	264	341	483	683
	3B TF 48 . 060	1"	19.1	6.35	153	181	216	**306**	375	484	685	968
	3B TF 56 . 060	1 1/2"	22.2	7.94	208	246	294	**416**	509	657	930	1320
	3B TF 64 . 060	1 1/2"	25.4	7.94	272	322	385	**545**	667	861	1220	1720
	3B TF 72 . 060	1 1/2"	28.6	7.94	309	366	438	**619**	758	978	1380	1960
	3B TF 88 . 060	2"	34.9	11.1	451	534	638	**902**	1110	1430	2020	2850
	3B TF 96 . 060	2"	38.1	11.1	570	674	806	**1140**	1400	1800	2550	3600
	3B TF 112 . 060	3"	44.5	14.3	825	976	1170	**1650**	2020	2610	3690	5220
	3B TF 128 . 060	3"	50.8	14.3	1090	1290	1550	**2190**	2680	3460	4891	6920
	3B TF 160 . 060	4"	63.5	15.9	1690	2000	2390	**3380**	4140	5350	7570	10700
90°	3B TF 06 . 090	1/8"-1/4"-3/8"	2.38	2.38	2.26	2.67	3.19	**4.5**	5.5	7.1	10.1	14.3
	3B TF 08 . 090	1/8"-1/4"-3/8"	3.18	3.18	4.19	4.96	5.93	**8.4**	10.3	13.2	18.7	26.5
	3B TF 10 . 090	1/4"-3/8"	3.97	3.18	6.45	7.63	9.12	**12.9**	15.8	20.4	28.8	40.8
	3B TF 12 . 090	3/8"	4.76	3.18	9.67	11.4	13.7	**19.3**	23.7	30.6	43.2	61.1
	3B TF 14 . 090	3/8"	5.56	3.18	13.1	15.4	18.5	**26.1**	32.0	41.3	58.4	82.6
	3B TF 16 . 090	3/8"	6.35	3.18	17.1	20.2	24.2	**34.2**	41.8	54.0	76.4	108
	3B TF 20 . 090	3/8"	7.94	3.18	26.6	31.5	37.6	**53.2**	65.1	84.1	119	168
	3B TF 24 . 090	1/2"	9.53	4.76	38.8	46.0	54.9	**77.7**	95.1	123	174	246
	3B TF 28 . 090	1/2"	11.1	4.76	53.2	62.9	75.2	**106**	130	168	238	336
	3B TF 32 . 090	3/4"	12.7	4.76	67.7	80.1	95.7	**135**	166	214	303	428
	3B TF 40 . 090	1"	15.9	6.35	108	128	153	**216**	264	341	483	683
	3B TF 48 . 090	1"	19.1	6.35	153	181	216	**306**	375	484	685	968
	3B TF 56 . 090	1 1/2"	22.2	7.94	208	246	294	**416**	509	657	930	1320
	3B TF 64 . 090	1 1/2"	25.4	7.94	272	322	385	**545**	667	861	1220	1720
	3B TF 72 . 090	1 1/2"	28.6	7.94	309	366	438	**619**	758	978	1380	1960
	3B TF 88 . 090	2"	34.9	11.1	451	534	638	**902**	1110	1430	2020	2850
	3B TF 96 . 090	2"	38.1	11.1	570	674	806	**1140**	1400	1800	2550	3600
	3B TF 112 . 090	3"	44.5	14.3	825	976	1170	**1650**	2020	2610	3690	5220
	3B TF 128 . 090	3"	50.8	14.3	1090	1290	1550	**2190**	2680	3460	4891	6920
	3B TF 160 . 090	4"	63.5	15.9	1690	2000	2390	**3380**	4140	5350	7570	10700
120°	3B TF 06 . 120	1/8"-1/4"-3/8"	2.38	2.38	2.26	2.67	3.19	**4.5**	5.5	7.1	10.1	14.3
	3B TF 08 . 120	1/8"-1/4"-3/8"	3.18	3.18	4.19	4.96	5.93	**8.4**	10.3	13.2	18.7	26.5
	3B TF 10 . 120	1/4"-3/8"	3.97	3.18	6.45	7.63	9.12	**12.9**	15.8	20.4	28.8	40.8
	3B TF 12 . 120	3/8"	4.76	3.18	9.67	11.4	13.7	**19.3**	23.7	30.6	43.2	61.1
	3B TF 14 . 120	3/8"	5.56	3.18	13.1	15.4	18.5	**26.1**	32.0	41.3	58.4	82.6
	3B TF 16 . 120	3/8"	6.35	3.18	17.1	20.2	24.2	**34.2**	41.8	54.0	76.4	108
	3B TF 20 . 120	3/8"	7.94	3.18	26.6	31.5	37.6	**53.2**	65.1	84.1	119	168
	3B TF 24 . 120	1/2"	9.53	4.76	38.8	46.0	54.9	**77.7**	95.1	123	174	246
	3B TF 28 . 120	1/2"	11.1	4.76	53.2	62.9	75.2	**106**	130	168	238	336
	3B TF 32 . 120	3/4"	12.7	4.76	67.7	80.1	95.7	**135**	166	214	303	428
	3B TF 40 . 120	1"	15.9	6.35	108	128	153	**216**	264	341	483	683
	3B TF 48 . 120	1"	19.1	6.35	153	181	216	**306**	375	484	685	968
	3B TF 56 . 120	1 1/2"	22.2	7.94	208	246	294	**416**	509	657	930	1320
	3B TF 64 . 120	1 1/2"	25.4	7.94	272	322	385	**545**	667	861	1220	1720
	3B TF 72 . 120	1 1/2"	28.6	7.94	309	366	438	**619**	758	978	1380	1960
	3B TF 88 . 120	2"	34.9	11.1	451	534	638	**902**	1110	1430	2020	2850
	3B TF 96 . 120	2"	38.1	11.1	570	674	806	**1140**	1400	1800	2550	3600
	3B TF 112 . 120	3"	44.5	14.3	825	976	1170	**1650**	2020	2610	3690	5220
	3B TF 128 . 120	3"	50.8	14.3	1090	1290	1550	**2190**	2680	3460	4891	6920
	3B TF 160 . 120	4"	63.5	15.9	1690	2000	2390	**3380**	4140	5350	7570	10700

Order No.: CODE . CONNETION . MATERIAL

Example: 3B TF 06 . 060 . 014T . 3 Type 3B TF with mentioned Q(lpm)@P(bar), Spray angle: 60˚, 1/4" BSPT, S.S.316

SPADFLOW
SPRAYING SYSTEMS AND NOZZLES

Spiral **Full-Cone** Spray Nozzles
Spadflow Series **3B TF**

Webpage + STP

3B TF

Spray angle (α)	Code	Connection** [inch]	B Ø [mm]	E Ø [mm]	Flow rate [l/min] P [bar] 0.5	0.7	1.0 K factor	2.0	3.0	5.0	10.0	20.0
150°	3B TF 06 . 150	1/8"-1/4"	2.38	2.38	2.26	2.67	3.19	**4.5**	5.5	7.1	10.1	14.3
	3B TF 08 . 150	1/8"-1/4"	3.18	3.18	4.19	4.96	5.93	**8.4**	10.3	13.2	18.7	26.5
	3B TF 10 . 150	1/4"	3.97	3.18	6.45	7.63	9.12	**12.9**	15.8	20.4	28.8	40.8
	3B TF 12 . 150	3/8"	4.76	3.18	9.67	11.4	13.7	**19.3**	23.7	30.6	43.2	61.1
	3B TF 14 . 150	3/8"	5.56	3.18	13.1	15.4	18.5	**26.1**	32.0	41.3	58.4	82.6
	3B TF 16 . 150	3/8"	6.35	3.18	17.1	20.2	24.2	**34.2**	41.8	54.0	76.4	108
	3B TF 20 . 150	3/8"	7.94	3.18	26.6	31.5	37.6	**53.2**	65.1	84.1	119	168
	3B TF 24 . 150	1/2"	9.53	4.76	38.8	46.0	54.9	**77.7**	95.1	123	174	246
	3B TF 28 . 150	1/2"	11.1	4.76	53.2	62.9	75.2	**106**	130	168	238	336
	3B TF 32 . 150	3/4"	12.7	4.76	67.7	80.1	95.7	**135**	166	214	303	428
	3B TF 40 . 150	1"	15.9	6.35	108	128	153	**216**	264	341	483	683
	3B TF 48 . 150	1"	19.1	6.35	153	181	216	**306**	375	484	685	968
	3B TF 56 . 150	1 1/2"	22.2	7.94	208	246	294	**416**	509	657	930	1320
	3B TF 64 . 150	1 1/2"	25.4	7.94	272	322	385	**545**	667	861	1220	1720
	3B TF 72 . 150	1 1/2"	28.6	7.94	309	366	438	**619**	758	978	1380	1960
	3B TF 88 . 150	2"	34.9	11.1	451	534	638	**902**	1110	1430	2020	2850
	3B TF 96 . 150	2"	38.1	11.1	570	674	806	**1140**	1400	1800	2550	3600
	3B TF 112 . 150	3"	44.5	14.3	825	976	1170	**1650**	2020	2610	3690	5220
	3B TF 128 . 150	3"	50.8	14.3	1090	1290	1550	**2190**	2680	3460	4891	6920
170°	3B TF 06 . 170	1/8"-1/4"	2.38	2.38	2.26	2.67	3.19	**4.5**	5.5	7.1	10.1	14.3
	3B TF 08 . 170	1/8"-1/4"	3.18	3.18	4.19	4.96	5.93	**8.4**	10.3	13.2	18.7	26.5
	3B TF 10 . 170	1/4"	3.97	3.18	6.45	7.63	9.12	**12.9**	15.8	20.4	28.8	40.8
	3B TF 12 . 170	3/8"	4.76	3.18	9.67	11.4	13.7	**19.3**	23.7	30.6	43.2	61.1
	3B TF 14 . 170	3/8"	5.56	3.18	13.1	15.4	18.5	**26.1**	32.0	41.3	58.4	82.6
	3B TF 16 . 170	3/8"	6.35	3.18	17.1	20.2	24.2	**34.2**	41.8	54.0	76.4	108
	3B TF 20 . 170	3/8"	7.94	3.18	26.6	31.5	37.6	**53.2**	65.1	84.1	119	168
	3B TF 24 . 170	1/2"	9.53	4.76	38.8	46.0	54.9	**77.7**	95.1	123	174	246
	3B TF 28 . 170	1/2"	11.1	4.76	53.2	62.9	75.2	**106**	130	168	238	336
	3B TF 32 . 170	3/4"	12.7	4.76	67.7	80.1	95.7	**135**	166	214	303	428
	3B TF 40 . 170	1"	15.9	6.35	108	128	153	**216**	264	341	483	683
	3B TF 48 . 170	1"	19.1	6.35	153	181	216	**306**	375	484	685	968
	3B TF 56 . 170	1 1/2"	22.2	7.94	208	246	294	**416**	509	657	930	1320
	3B TF 64 . 170	1 1/2"	25.4	7.94	272	322	385	**545**	667	861	1220	1720
	3B TF 72 . 170	1 1/2"	28.6	7.94	309	366	438	**619**	758	978	1380	1960
	3B TF 88 . 170	2"	34.9	11.1	451	534	638	**902**	1110	1430	2020	2850
	3B TF 96 . 170	2"	38.1	11.1	570	674	806	**1140**	1400	1800	2550	3600
	3B TF 112 . 170	3"	44.5	14.3	825	976	1170	**1650**	2020	2610	3690	5220
	3B TF 128 . 170	3"	50.8	14.3	1090	1290	1550	**2190**	2680	3460	4891	6920

** Different connection sizes are available upon request
B = bore diameter E = narrowest free cross section

Order No.: CODE . CONNETION . MATERIAL

Example: 3B TF 06 . 060 . 014T . 3 Type 3B TF with mentioned Q(lpm)@P(bar), Spray angle: 60˚, 1/4" BSPT, S.S.316

SPADFLOW
SPRAYING SYSTEMS AND NOZZLES

Extra-Large Flow Passage **Full-Cone** Spray Nozzles
Spadflow Series **3S R**

Webpage + STP

3S R

Extra-Large Flow Passage Nozzle

Applications:

- Cooling for steel plants
- Process cooling for food, chemical, and industrial processes
- Fire protection
- Quenching
- Scrubbing

Properties:

- Extra-large flow passages and large open orifice eliminating clogging
- Internal vane is cast as part of the nozzle
- Operating pressures up to 4 bar (full cone pattern develops at 0.7 bar)
- Female Connection

3S R

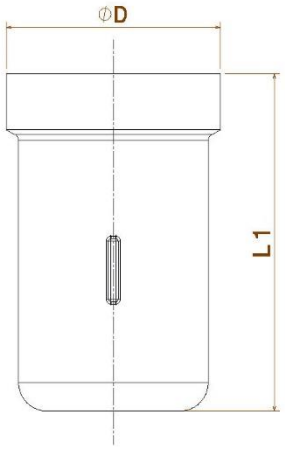

Size	Conn. code			Dimensions [mm]		Weight (kg) (metal)
	BSPT	BSPP	NPT	L_1	D	
2”	200T	200P	200N	112.7	74.6	1.36
2 1/2”	212T	212P	212N	138.9	88.1	2.49
3”	300T	300P	300N	165.1	104.8	3.40
4”	400T	400P	400N	206.4	127.0	6.12
5”	500T	500P	500N	254.8	161.9	14.97
6”	600T	600P	600N	300.0	193.7	17.46
8”	800T	800P	800N	388.9	241.3	34.02

Material*	Code
Brass	1
S.S.304	2
S.S.316	3

* Different materials are available upon request

α	Spray coverage @ 200 mm
50°	180
65°	250
80°	320
95°	420

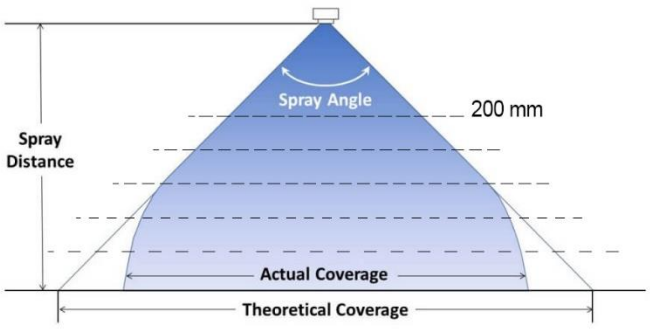

037– R01 – C00

Order No.: CODE . CONNETION . MATERIAL

Example: 3S R 45 . 050 . 200T . 3 Type 3S R with mentioned Q(lpm)@P(bar), Spray angle: 50˚, 2” BSPT, S.S.316

SPADFLOW
SPRAYING SYSTEMS AND NOZZLES

Extra-Large Flow Passage **Full-Cone** Spray Nozzles
Spadflow Series **3S R**

Webpage + STP

3S R

Spray angle (α)	Code	Connection** [inch]	Flow rate [l/min] P [bar] 0.1	0.2	0.4	0.5	0.7	1.5	3	4
50°	3S R 45 . 050	2"	122	**168**	231	256	298	424	583	665
	3S R 70 . 050	2 1/2"	190	**261**	359	398	464	659	907	1035
	3S R 110 . 050	3"	298	**410**	564	625	730	1036	1425	1627
	3S R 160 . 050	4"	434	**596**	820	909	1061	1507	2073	2366
	3S R 190 . 050	4"	515	**708**	974	1079	1260	1789	2461	2809
	3S R 250 . 050	5"	677	**932**	1282	1420	1658	2354	3238	3697
	3S R 280 . 050	5"	759	**1044**	1436	1591	1857	2637	3627	4140
	3S R 360 . 050	6"	975	**1342**	1846	2045	2388	3390	4663	5323
	3S R 400 . 050	6"	1084	**1491**	2051	2273	2653	3767	5181	5915
	3S R 650 . 050	8"	1761	**2423**	3333	3693	4311	6121	8420	9611
	3S R 750 . 050	8"	2032	**2795**	3845	4261	4974	7063	9715	11090
65°	3S R 45 . 065	2"	122	**168**	231	256	298	424	583	665
	3S R 60 . 065	2"	163	**224**	308	341	398	565	777	887
	3S R 70 . 065	2 1/2"	190	**261**	359	398	464	659	907	1035
	3S R 90 . 065	2 1/2"	244	**335**	461	511	597	848	1166	1331
	3S R 110 . 065	3"	298	**410**	564	625	730	1036	1425	1627
	3S R 140 . 065	3"	379	**522**	718	795	929	1318	1814	2070
	3S R 160 . 065	4"	434	**596**	820	909	1061	1507	2073	2366
	3S R 190 . 065	4"	515	**708**	974	1079	1260	1789	2461	2809
	3S R 250 . 065	4" – 5"	677	**932**	1282	1420	1658	2354	3238	3697
	3S R 280 . 065	5"	759	**1044**	1436	1591	1857	2637	3627	4140
	3S R 360 . 065	6"	975	**1342**	1846	2045	2388	3390	4663	5323
	3S R 380 . 065	5"	1030	**1416**	1948	2159	2520	3579	4922	5619
	3S R 400 . 065	6"	1084	**1491**	2051	2273	2653	3767	5181	5915
	3S R 560 . 065	6"	1517	**2087**	2871	3182	3714	5274	7254	8280
	3S R 650 . 065	8"	1761	**2423**	3333	3693	4311	6121	8420	9611
	3S R 750 . 065	8"	2032	**2795**	3845	4261	4974	7063	9715	11090
	3S R 850 . 065	8"	2303	**3168**	4358	4829	5637	8005	11011	12569
80°	3S R 160 . 080	4"	434	**596**	820	909	1061	1507	2073	2366
	3S R 250 . 080	5"	677	**932**	1282	1420	1658	2354	3238	3697
	3S R 360 . 080	6"	975	**1342**	1846	2045	2388	3390	4663	5323
	3S R 650 . 080	8"	1761	**2423**	3333	3693	4311	6121	8420	9611
95°	3S R 45 . 095	2"	122	**168**	231	256	298	424	583	665
	3S R 60 . 095	2"	163	**224**	308	341	398	565	777	887
	3S R 70 . 095	2 1/2"	190	**261**	359	398	464	659	907	1035
	3S R 90 . 095	2 1/2"	244	**335**	461	511	597	848	1166	1331
	3S R 110 . 095	3"	298	**410**	564	625	730	1036	1425	1627
	3S R 140 . 095	3"	379	**522**	718	795	929	1318	1814	2070
	3S R 190 . 095	4"	515	**708**	974	1079	1260	1789	2461	2809
	3S R 250 . 095	4"	677	**932**	1282	1420	1658	2354	3238	3697
	3S R 280 . 095	5"	759	**1044**	1436	1591	1857	2637	3627	4140
	3S R 380 . 095	5"	1030	**1416**	1948	2159	2520	3579	4922	5619
	3S R 400 . 095	6"	1084	**1491**	2051	2273	2653	3767	5181	5915
	3S R 560 . 095	6"	1517	**2087**	2871	3182	3714	5274	7254	8280
	3S R 750 . 095	8"	2032	**2795**	3845	4261	4974	7063	9715	11090
	3S R 850 . 095	8"	2303	**3168**	4358	4829	5637	8005	11011	12569
	3S R 1000 . 095	8"	2710	**3727**	5127	5681	6632	9417	12954	14787

** Different connection sizes are available upon request

Order No.: CODE . CONNETION . MATERIAL

Example: 3S R 45 . 050 . 200T . 3 Type 3S R with mentioned Q(lpm)@P(bar), Spray angle: 50˚, 2" BSPT, S.S.316

SPADFLOW
SPRAYING SYSTEMS AND NOZZLES

Extra-Large Flow Passage **Full-Cone** Spray Nozzles
Spadflow Series **3B MP**

Webpage + STP

3B MP

Extra-Large Flow Passage Full-Cone Nozzle

3B MP

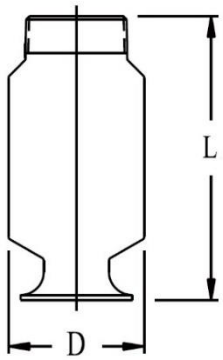

Applications:

- Cooling for steel plants
- Washing
- Process cooling for food, chemical, and industrial processes
- Evaporate tailing ponds or volatile waste
- Fire protection
- Quenching
- Gas scrubbing
- Distribute slurry in open towers

Properties:

- Extra-large flow passages and large open orifice eliminating clogging
- Two unique S-shaped internal vanes allow free passage of particles
- High energy efficiency

Nozzle Code	Size	Conn. code					Weight (kg) (metal)
		BSPT	BSPP	NPT	L	D	
3B MP 750 . 120	2”	200T	200P	200N	159	66.8	1.59
3B MP 812 . 120	2”	200T	200P	200N	159	66.8	1.59
3B MP 875 . 120	2”	200T	200P	200N	159	66.8	1.59
3B MP 937 . 120	2”	200T	200P	200N	165	82.6	1.70
3B MP 1000 . 120	2”	200T	200P	200N	171	82.6	1.70
3B MP 1000 . 120	2 1/2”	212T	212P	212N	168	82.6	1.70
3B MP 1125 . 120	2”	200T	200P	200N	171	82.6	2.04
3B MP 1125 . 120	2 1/2”	212T	212P	212N	178	82.6	2.04
3B MP 1250 . 120	2 1/2”	212T	212P	212N	181	82.6	2.04
3B MP 1375 . 120	2 1/2”	212T	212P	212N	229	102	2.84
3B MP 1500 . 120	2 1/2”	212T	212P	212N	229	102	2.84
3B MP 1500 . 120	3”	300T	300P	300N	248	121	3.29
3B MP 1625 . 120	3”	300T	300P	300N	251	121	3.29
3B MP 1750 . 120	3”	300T	300P	300N	251	121	3.29
3B MP 1750 . 120	4”	400T	400P	400N	248	121	3.63
3B MP 1875 . 120	4”	400T	400P	400N	248	121	3.63
3B MP 2000 . 120	4”	400T	400P	400N	311	152	7.26
3B MP 2125 . 120	4”	400T	400P	400N	311	152	7.26
3B MP 2250 . 120	4”	400T	400P	400N	311	152	7.26

Material*	Code
Brass	1
S.S.304	2
S.S.316	3

* Different materials are available upon request

α	Spray coverage @ 200 mm
120°	692

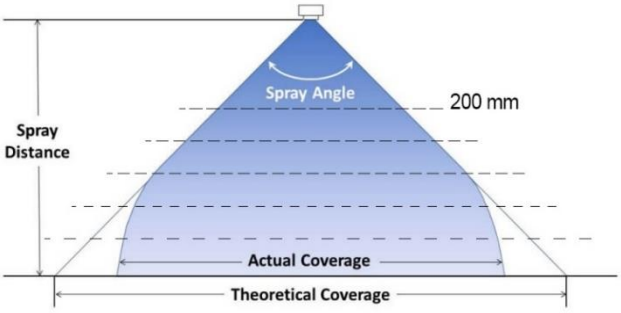

037– R01 – C01

Order No.: CODE . CONNETION . MATERIAL

Example: 3B MP 750 . 120 . 200T . 3 Type 3B MP with mentioned Q(lpm)@P(bar), Spray angle: 120˚, 2” BSPT, S.S.316

Extra-Large Flow Passage **Full-Cone** Spray Nozzles

Spadflow Series **3B MP**

Webpage + STP

Spray angle (α)	Code	Connection** [inch]	Flow rate [l/min]							
			P [bar]							
			0.2	0.3	0.5	0.7	1 *K factor*	2	3	5
120°	3B MP 750 . 120	2"	94.8	115	146	171	202	280	339	430
	3B MP 812 . 120	2"	104	126	160	187	221	306	370	471
	3B MP 875 . 120	2"	129	155	197	231	273	378	458	582
	3B MP 937 . 120	2"	144	174	221	259	306	424	513	652
	3B MP 1000 . 120	2" – 2 1/2"	168	203	259	303	358	496	600	763
	3B MP 1125 . 120	2" – 2 1/2"	206	249	317	371	439	608	736	935
	3B MP 1250 . 120	2 1/2"	247	299	381	446	527	730	883	1120
	3B MP 1375 . 120	2 1/2"	297	359	456	535	632	875	1060	1350
	3B MP 1500 . 120	2 1/2" – 3"	363	440	559	655	774	1070	1230	1650
	3B MP 1625 . 120	3"	428	517	658	770	911	1260	1530	1940
	3B MP 1750 . 120	3" – 4"	488	591	751	880	1040	1440	1740	2220
	3B MP 1875 . 120	4"	549	664	845	989	1,170	1,620	1,960	2,490
	3B MP 2000 . 120	4"	643	778	989	1160	1370	1900	2300	2920
	3B MP 2125 . 120	4"	718	869	1100	1290	1530	2120	2560	3260
	3B MP 2250 . 120	4"	779	943	1200	1,400	1,660	2,300	2,780	3,540

** Different connection sizes are available upon request

Order No.: CODE . CONNETION . MATERIAL

Example: 3B MP 750 . 120 . 200T . 3 Type 3B MP with mentioned Q(lpm)@P(bar), Spray angle: 120˚, 2" BSPT, S.S.316

SPAD FLOW
SPRAYING SYSTEMS AND NOZZLES

5

ENG-038-R01-02.08.10

اسپری نازل های صنعتی

خطی (کارواشی)

FLAT FAN

INDUSTRIAL SPRAY NOZZLES

5L 632, 5L 633 5-1
5L 660 5-4
5L 664, 5L 665 5-6
5L 652 5-8
5L 656, 5L 657 5-11
5L 688, 5L 689 5-13
5M LD 5-14
5L 686 5-16
5B NF 5-18
5L 602 5-23
5L 608 5-27
5L 652 HP 5-30

SPADFLOW
SPRAYING SYSTEMS AND NOZZLES

Flat-Fan Spray Nozzles
Spadflow Series **5L 632 – 5L 633**

Webpage + STP

5L 632
5L 633

Low Pressure Nozzle

Applications:

- Spray cleaning
- Surface treatment
- Filter cleaning
- Belt cleaning
- Lubricating
- Coating

Properties:

- Standard design with conical self-sealing thread connection
- Stable spray angle
- Uniform, parabolical distribution of liquid

5L 632

5L 633

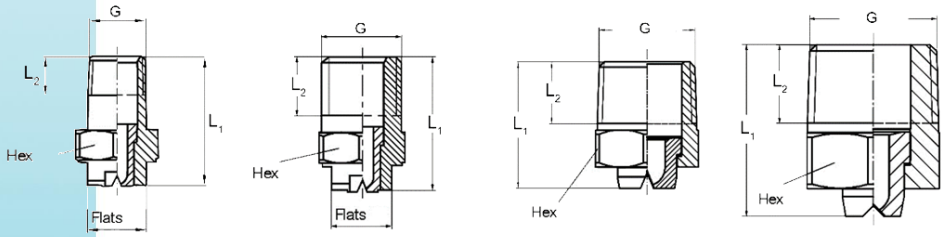

Size	Conn. code			Dimensions [mm]				Weight
	BSPT	BSPP	NPT	L_1	L_2	Flat	Hex	
1/8”	018T	018P	018T	22.0	6.5	10	14	17 g
1/4”	014T	014P	014T	22.0	9.7	10	14	20 g
3/8”	038T	038P	038T	22.0	10.1	-	17	30 g
1/2”	012T	012P	012T	27.0	13.2	-	22	40 g

Material*	Code
Brass	1
S.S.304	2
S.S.316	3

* Different materials are available upon request

α	Spray coverage @ 250 mm
20°	85
30°	120-130
45°	170
60°	260-290
75°	380
90°	420-540
120°	910

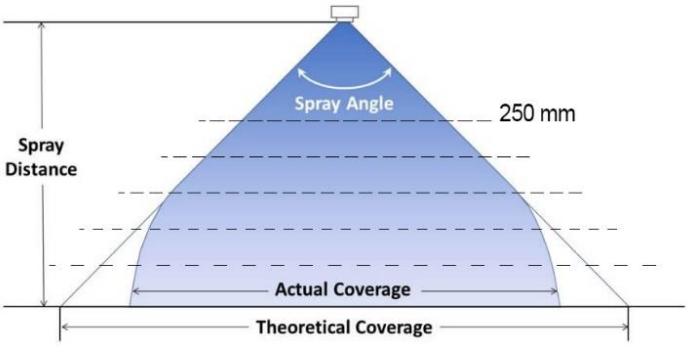

Spray angle (α)	Code	Connection** [inch]	A Ø [mm]	E Ø [mm]	Flow rate [l/min] P [bar] 0.5	1.0 K factor	2.0	3.0	5.0	7.0	10.0
20°	5L 632 30 . 020	1/8"-1/4"	0.70	0.60	0.16	0.23	0.32	0.39	**0.51**	0.60	0.72
	5L 632 36 . 020	1/8"-1/4"	1.00	0.80	0.31	0.44	0.63	0.77	**1.00**	1.18	1.40
	5L 632 44 . 020	1/8"-1/4"	1.35	1.10	0.62	0.88	1.25	1.53	**1.98**	2.34	2.80
	5L 632 48 . 020	1/8"-1/4"	1.50	1.20	0.80	1.13	1.60	1.96	**2.53**	2.99	3.58
30°	5L 632 30 . 030	1/8"-1/4"	0.60	0.50	0.16	0.23	0.32	0.39	**0.51**	0.60	0.72
	5L 632 36 . 030	1/8"-1/4"	1.00	0.70	0.31	0.44	0.63	0.77	**1.00**	1.18	1.40
	5L 632 40 . 030	1/8"-1/4"	1.20	0.90	0.50	0.71	1.00	1.23	**1.58**	1.87	2.24
	5L 632 48 . 030	1/8"-1/4"	1.50	1.10	0.80	1.13	1.60	1.96	**2.53**	2.99	3.58

038– R01 – C00

Order No.: CODE . CONNETION . MATERIAL

Example: 5L 632 30 . 060 . 014T . 3 Type 5L 632 with mentioned Q(lpm)@P(bar), Spray angle: 60˚, 1/4” BSPT, S.S.316

SPADFLOW
SPRAYING SYSTEMS AND NOZZLES

Flat-Fan Spray Nozzles
Spadflow Series **5L 632 – 5L 633**

Webpage + STP

5L 632
5L 633

Spray angle (α)	Code	Connection** [inch]	A Ø [mm]	E Ø [mm]	Flow rate [l/min] P [bar] 0.5	1.0 K factor	2.0	3.0	5.0	7.0	10.0
	5L 632 56 . 030	1/8"-1/4"	2.00	1.50	1.25	1.77	2.50	3.06	**3.95**	4.68	5.59
	5L 632 64 . 030	1/4"	2.50	1.80	2.00	2.83	4.00	4.90	**6.33**	7.48	8.94
	5L 632 72 . 030	1/4"	3.00	2.40	3.15	4.46	6.30	7.72	**9.96**	11.79	14.09
	5L 632 76 . 030	1/4"	3.50	2.70	4.00	5.66	8.00	9.80	**12.65**	14.97	17.89
	5L 632 80 . 030	1/4"	4.00	3.10	5.00	7.07	10.00	12.25	**15.81**	18.71	22.36
45°	5L 632 30 . 045	1/8"-1/4"	0.70	0.50	0.16	0.23	0.32	0.39	**0.51**	0.60	0.72
	5L 632 36 . 045	1/8"-1/4"	1.00	0.60	0.31	0.44	0.63	0.77	**1.00**	1.18	1.40
	5L 632 40 . 045	1/8"-1/4"	1.20	0.90	0.50	0.71	1.00	1.23	**1.58**	1.87	2.24
	5L 632 48 . 045	1/8"-1/4"	1.50	1.10	0.80	1.13	1.60	1.96	**2.53**	2.99	3.58
	5L 632 56 . 045	1/8"-1/4"	2.00	1.40	1.25	1.77	2.50	3.06	**3.95**	4.68	5.59
	5L 632 64 . 045	1/8"-1/4"	2.50	1.80	2.00	2.83	4.00	4.90	**6.33**	7.48	8.94
	5L 632 67 . 045	1/4"- 3/8"	2.70	2.00	2.83	3.36	4.75	5.82	**7.51**	8.89	10.62
	5L 632 72 . 045	1/4"- 3/8"	3.00	2.40	3.15	4.46	6.30	7.72	**9.96**	11.79	14.09
	5L 632 76 . 045	1/4"- 3/8"	3.50	2.60	4.00	5.66	8.00	9.80	**12.65**	14.97	17.89
	5L 632 80 . 045	1/4"- 3/8"- 1/2"	4.00	3.00	5.00	7.07	10.00	12.25	**15.81**	18.71	22.36
	5L 632 84 . 045	1/4"- 1/2"	4.50	3.40	6.25	8.84	12.50	15.31	**19.76**	23.39	27.95
	5L 632 88 . 045	3/8"	5.00	3.80	8.00	11.31	16.00	19.60	**25.30**	29.93	35.78
	5L 632 92 . 045	3/8"	5.50	4.20	10.00	14.14	20.00	24.50	**31.62**	37.42	44.72
	5L 632 96 . 045	3/8"	6.00	4.40	12.50	17.68	25.00	30.62	**39.53**	46.77	55.90
60°	5L 632 30 . 060	1/8"-1/4"	0.70	0.40	0.16	0.23	0.32	0.39	**0.51**	0.60	0.72
	5L 632 33 . 060	1/8"-1/4"	0.90	0.50	0.22	0.32	0.45	0.55	**0.71**	0.84	1.01
	5L 632 36 . 060	1/8"-1/4"	1.00	0.60	0.31	0.44	0.63	0.77	**1.00**	1.18	1.40
	5L 632 40 . 060	1/8"-1/4"	1.20	0.80	0.50	0.71	1.00	1.23	**1.58**	1.87	2.24
	5L 632 44 . 060	1/8"-1/4"	1.35	0.90	0.62	0.88	1.25	1.53	**1.98**	2.34	2.80
	5L 632 48 . 060	1/8"-1/4"	1.50	1.00	0.80	1.13	1.60	1.96	**2.53**	2.99	3.58
	5L 632 51 . 060	1/8"-1/4"	1.65	1.10	0.95	1.34	1.90	2.33	**3.00**	3.56	4.25
	5L 632 56 . 060	1/8"-1/4"	2.00	1.30	1.25	1.77	2.50	3.06	**3.95**	4.68	5.59
	5L 632 60 . 060	1/8"-1/4"	2.20	1.50	1.58	2.23	3.15	3.86	**4.98**	5.89	7.04
	5L 632 64 . 060	1/4"- 3/8"	2.50	1.60	2.00	2.83	4.00	4.90	**6.33**	7.48	8.94
	5L 632 67 . 060	1/4"- 3/8"	2.70	1.80	2.38	3.36	4.75	5.82	**7.51**	8.89	10.62
	5L 632 72 . 060	1/4"- 3/8"	3.00	2.10	3.15	4.46	6.30	7.72	**9.96**	11.79	14.09
	5L 632 76 . 060	1/4"- 3/8"	3.50	2.30	4.00	5.66	8.00	9.80	**12.65**	14.97	17.89
	5L 632 80 . 060	1/4"- 1/2"	4.00	2.60	5.00	7.07	10.00	12.25	**15.81**	18.71	22.36
	5L 632 84 . 060	1/4"- 1/2"	4.50	3.00	6.25	8.84	12.50	15.31	**19.76**	23.39	27.95
	5L 632 88 . 060	1/4"- 1/2"	5.00	3.40	8.00	11.31	16.00	19.60	**25.30**	29.93	35.78
	5L 632 92 . 060	1/2"	5.50	4.10	10.00	14.14	20.00	24.50	**31.62**	37.42	44.72
	5L 632 96 . 060	1/2"	6.00	4.20	12.50	17.68	25.00	30.62	**39.53**	46.77	55.90
	5L 633 00 . 060	1/2"	7.00	4.80	15.75	22.27	31.50	38.57	**49.80**	58.92	70.43
	5L 633 04 . 060	1/2"	8.00	5.50	20.00	28.28	40.00	48.99	**63.25**	74.83	89.44
	5L 633 08 . 060	1/2"	9.00	6.80	25.00	35.36	50.00	61.24	**79.06**	93.54	111.80
75°	5L 632 14 . 075	1/8"-1/4"	0.20	0.12	–	0.04	0.05	0.06	**0.08**	0.09	0.11
	5L 632 16 . 075	1/8"-1/4"	0.20	0.14	–	0.05	0.07	0.08	**0.10**	0.12	0.15
	5L 632 18 . 075	1/8"-1/4"	0.20	0.16	–	0.06	0.08	0.10	**0.13**	0.15	0.18
	5L 632 21 . 075	1/8"-1/4"	0.40	0.20	–	0.08	0.11	0.14	**0.18**	0.21	0.25
	5L 632 24 . 075	1/8"-1/4"	0.50	0.30	–	0.12	0.16	0.20	**0.26**	0.30	0.36
	5L 632 27 . 090	1/8"-1/4"	0.60	0.30	0.11	0.16	0.22	0.27	**0.35**	0.41	0.49
90°	5L 632 21 . 090	1/8"-1/4"	0.40	0.20	-	0.08	0.11	0.14	**0.18**	0.21	0.25
	5L 632 27 . 090	1/8"-1/4"	0.60	0.30	0.11	0.16	0.22	0.27	**0.35**	0.41	0.49
	5L 632 30 . 090	1/8"-1/4"	0.70	0.40	0.16	0.23	0.32	0.39	**0.51**	0.60	0.72
	5L 632 33 . 090	1/8"-1/4"	0.90	0.50	0.22	0.32	0.45	0.55	**0.71**	0.84	1.01
	5L 632 36 . 090	1/8"-1/4"	1.00	0.50	0.31	0.44	0.63	0.77	**1.00**	1.18	1.41
	5L 632 40 . 090	1/8"-1/4"	1.20	0.70	0.50	0.71	1.00	1.23	**1.58**	1.87	2.24
	5L 632 44 . 090	1/8"-1/4"	1.35	0.80	0.62	0.88	1.25	1.53	**1.98**	2.34	2.80
	5L 632 48 . 090	1/8"-1/4"	1.50	0.80	0.80	1.13	1.60	1.96	**2.53**	2.99	3.58
	5L 632 51 . 090	1/8"-1/4"	1.65	0.90	0.95	1.34	1.90	2.33	**3.00**	3.56	4.25
	5L 632 56 . 090	1/8"-1/4"	2.00	1.10	1.25	1.77	2.50	3.06	**3.95**	4.68	5.59
	5L 632 60 . 090	1/8"-1/4"	2.20	1.20	1.58	2.23	3.15	3.86	**4.98**	5.89	7.04
	5L 632 64 . 090	1/4"- 3/8"	2.50	1.30	2.00	2.83	4.00	4.90	**6.33**	7.48	8.94
	5L 632 67 . 090	1/4"- 3/8"	2.70	1.40	2.38	3.36	4.75	5.82	**7.51**	8.89	10.62
	5L 632 72 . 090	1/4"- 3/8"	3.00	1.70	3.15	4.46	6.30	7.72	**9.96**	11.79	14.09

Order No.: CODE . CONNETION . MATERIAL

Example: 5L 632 30 . 060 . 014T . 3 Type 5L 632 with mentioned Q(lpm)@P(bar), Spray angle: 60˚, 1/4" BSPT, S.S.316

SPADFLOW
SPRAYING SYSTEMS AND NOZZLES

Flat-Fan Spray Nozzles
Spadflow Series **5L 632 – 5L 633**

Webpage + STP

5L 632
5L 633

Spray angle (α)	Code	Connection** [inch]	A Ø [mm]	E Ø [mm]	Flow rate [l/min] P [bar] 0.5	1.0 K factor	2.0	3.0	5.0	7.0	10.0
	5L 632 76 . 090	**1/4"- 3/8"**	3.50	1.90	4.00	5.66	8.00	9.80	**12.65**	14.97	17.89
	5L 632 80 . 090	**1/4"- 1/2"**	4.00	2.40	5.00	7.07	10.00	12.25	**15.81**	18.71	22.36
	5L 632 84 . 090	**1/4"- 1/2"**	4.50	2.40	6.25	8.84	12.50	15.31	**19.76**	23.39	27.95
	5L 632 88 . 090	**1/4"- 1/2"**	5.00	3.10	8.00	11.31	16.00	19.60	**25.30**	29.93	35.78
	5L 632 92 . 090	**1/2"**	5.50	3.60	10.00	14.14	20.00	24.50	**31.62**	37.42	44.72
	5L 632 96 . 090	**1/2"**	6.00	3.90	12.50	17.68	25.00	30.62	**39.53**	46.77	55.90
	5L 632 18 . 120	**1/8"-1/4"**	0.35	0.20	-	0.06	0.08	0.10	**0.13**	0.15	0.18
	5L 632 21 . 120	**1/8"-1/4"**	0.40	0.20	-	0.08	0.11	0.14	**0.18**	0.21	0.25
	5L 632 24 . 120	**1/8"-1/4"**	0.50	0.20	-	0.12	0.16	0.20	**0.26**	0.30	0.36
	5L 632 27 . 120	**1/8"-1/4"**	0.60	0.30	-	0.16	0.22	0.27	**0.35**	0.41	0.49
	5L 632 30 . 120	**1/8"-1/4"**	0.70	0.30	0.16	0.23	0.32	0.39	**0.51**	0.60	0.72
	5L 632 33 . 120	**1/8"-1/4"**	0.90	0.40	0.22	0.32	0.45	0.55	**0.71**	0.84	1.01
	5L 632 36 . 120	**1/8"-1/4"**	1.00	0.50	0.31	0.44	0.63	0.77	**1.00**	1.18	1.41
	5L 632 40 . 120	**1/8"-1/4"**	1.20	0.60	0.50	0.71	1.00	1.23	**1.58**	1.87	2.24
	5L 632 44 . 120	**1/8"-1/4"**	1.35	0.60	0.62	0.88	1.25	1.53	**1.98**	2.34	2.80
	5L 632 48 . 120	**1/8"-1/4"**	1.50	0.60	0.80	1.13	1.60	1.96	**2.53**	2.99	3.58
120˚	**5L 632 51 . 120**	**1/8"-1/4"**	1.65	0.90	0.95	1.34	1.90	2.33	**3.00**	3.56	4.25
	5L 632 56 . 120	**1/8"-1/4"**	2.00	0.90	1.25	1.77	2.50	3.06	**3.95**	4.68	5.59
	5L 632 60 . 120	**1/8"-1/4"**	2.20	1.10	1.58	2.23	3.15	3.86	**4.98**	5.89	7.04
	5L 632 64 . 120	**1/4"- 3/8"**	2.50	1.30	2.00	2.83	4.00	4.90	**6.33**	7.48	8.94
	5L 632 67 . 120	**1/4"- 3/8"**	2.70	1.40	2.38	3.36	4.75	5.82	**7.51**	8.89	10.62
	5L 632 72 . 120	**1/4"- 3/8"**	3.00	1.60	3.15	4.46	6.30	7.72	**9.96**	11.79	14.09
	5L 632 76 . 120	**1/4"- 3/8"**	3.50	1.70	4.00	5.66	8.00	9.80	**12.65**	14.97	17.89
	5L 632 80 . 120	**1/4"- 1/2"**	4.00	2.00	5.00	7.07	10.00	12.25	**15.81**	18.71	22.36
	5L 632 84 . 120	**1/4"- 1/2"**	4.50	2.30	6.25	8.84	12.50	15.31	**19.76**	23.39	27.95
	5L 632 88 . 120	**1/2"**	5.00	2.60	8.00	11.31	16.00	19.60	**25.30**	29.93	35.78
	5L 632 92 . 120	**1/2"**	5.50	2.90	10.00	14.14	20.00	24.50	**31.62**	37.42	44.72

** Different connection sizes are available upon request
A = equivalent bore diameter E = narrowest free cross section

Order No.: CODE . CONNETION . MATERIAL

Example: 5L 632 30 . 060 . 014T . 3 Type 5L 632 with mentioned Q(lpm)@P(bar), Spray angle: 60˚, 1/4" BSPT, S.S.316

SPADFLOW
SPRAYING SYSTEMS AND NOZZLES

Flat-Fan Spray Nozzles
Spadflow Series **5L 660**

Webpage + STP

5L 660

Applications:

- Cleaning installations
- Cooling headers
- Spray pipes
- Roll cooling
- Cooling of rolled stock

Properties:

- Assembly with retaining nut 3/8 BSPT and dovetail guide
- Stable spray angle
- Automatic jet alignment due to dove-tail guide
- Uniform, parabolical distribution of liquid
- Non-clogging
- High spray energy

5L 660

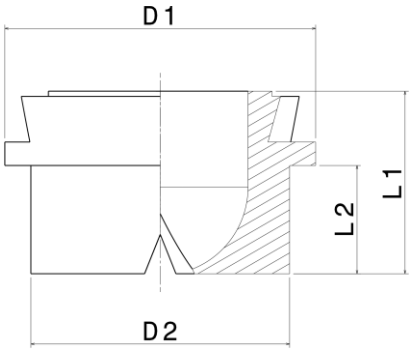

Dimensions [mm]				
D_1	L_1	L_2	D_2	Weight
14.8	12.0	7.0	12.0	10 g

Material*	Code
Brass	1
S.S.304	2
S.S.316	3

* Different materials are available upon request

α	Spray coverage @ 250 mm
20°	85
30°	120-130
45°	170-220
60°	260-290
75°	380
90°	420-530
120°	630-900

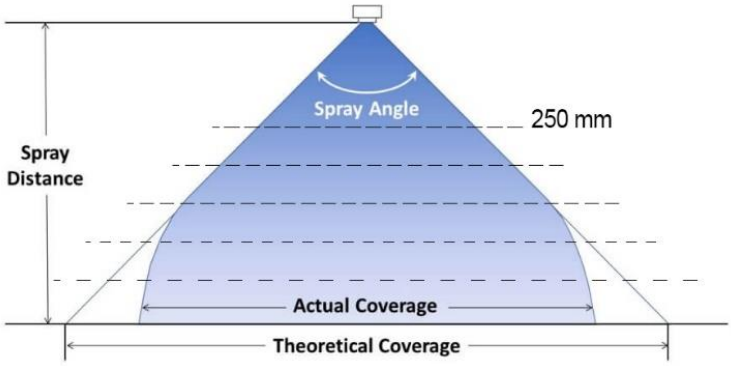

Spray angle (α)	Code	A Ø [mm]	E Ø [mm]	Flow rate [l/min] P [bar] 0.5	1.0 K factor	2.0	3.0	5.0	10.0
20°	**5L 660 30 . 020**	0.70	0.60	0.16	0.23	0.32	0.39	**0.51**	0.72
	5L 660 36 . 020	1.00	0.80	0.31	0.44	0.63	0.77	**1.00**	1.40
	5L 660 44 . 020	1.35	1.10	0.62	0.88	1.25	1.53	**1.98**	2.80
	5L 660 48 . 020	1.50	1.20	0.80	1.13	1.60	1.96	**2.53**	3.58
30°	**5L 660 30 . 030**	0.60	0.50	0.16	0.23	0.32	0.39	**0.51**	0.72
	5L 660 36 . 030	1.00	0.70	0.31	0.44	0.63	0.77	**1.00**	1.40
	5L 660 40 . 030	1.20	0.90	0.50	0.71	1.00	1.23	**1.58**	2.24
	5L 660 48 . 030	1.50	1.10	0.80	1.13	1.60	1.96	**2.53**	3.57
	5L 660 56 . 030	2.00	1.50	1.25	1.76	2.50	3.06	**3.95**	5.59

038– R01 – C00

Order No.: CODE . MATERIAL

Example.: 5L 660 30 . 060 . 3 Type 5L 660 with mentioned Q(lpm)@P(bar), Spray angle: 60˚, S.S.316

SPADFLOW
SPRAYING SYSTEMS AND NOZZLES

Flat-Fan Spray Nozzles
Spadflow Series **5L 660**

Webpage + STP

5L 660

Spray angle (α)	Code	A Ø [mm]	E Ø [mm]	Flow rate [l/min] P [bar] 0.5	1.0 K factor	2.0	3.0	5.0	10.0
45°	**5L 660 30 . 045**	0.70	0.50	0.16	0.23	0.32	0.39	**0.51**	0.72
	5L 660 36 . 045	1.00	0.60	0.31	0.44	0.63	0.77	**1.00**	1.40
	5L 660 40 . 045	1.20	0.90	0.50	0.71	1.00	1.23	**1.58**	2.24
	5L 660 48 . 045	1.50	1.10	0.80	1.13	1.60	1.96	**2.53**	3.58
	5L 660 56 . 045	2.00	1.40	1.25	1.76	2.50	3.06	**3.95**	5.59
	5L 660 64 . 045	2.50	1.80	2.00	2.83	4.00	4.90	**6.33**	8.94
60°	**5L 660 30 . 060**	0.70	0.40	0.16	0.23	0.32	0.39	**0.51**	0.72
	5L 660 33 . 060	0.90	0.50	0.22	0.32	0.45	0.55	**0.71**	1.01
	5L 660 36 . 060	1.00	0.60	0.31	0.44	0.63	0.77	**1.00**	1.40
	5L 660 40 . 060	1.20	0.80	0.50	0.71	1.00	1.23	**1.58**	2.24
	5L 660 44 . 060	1.35	0.90	0.62	0.88	1.25	1.53	**1.98**	2.80
	5L 660 48 . 060	1.50	1.00	0.80	1.13	1.60	1.96	**2.53**	3.58
	5L 660 51 . 060	1.65	1.10	0.95	1.34	1.90	2.33	**3.00**	4.25
	5L 660 56 . 060	2.00	1.30	1.25	1.77	2.50	3.06	**3.95**	5.59
	5L 660 60 . 060	2.20	1.50	1.58	2.23	3.15	3.86	**4.98**	7.04
	5L 660 64 . 060	2.50	1.60	2.00	2.83	4.00	4.90	**6.33**	8.94
	5L 660 72 . 060	3.00	2.10	3.15	4.46	6.30	7.72	**9.96**	14.09
	5L 660 80 . 060	4.00	2.60	5.00	7.07	10.00	12.25	**15.81**	22.36
75°	**5L 660 14 . 075**	0.20	0.12	-	0.04	0.05	0.06	**0.08**	0.11
	5L 660 16 . 075	0.20	0.14	-	0.05	0.07	0.08	**0.10**	0.15
	5L 660 18 . 075	0.20	0.16	-	0.06	0.08	0.10	**0.13**	0.18
	5L 660 21 . 075	0.50	0.20	-	0.08	0.11	0.14	**0.18**	0.25
	5L 660 24 . 075	0.50	0.30	-	0.12	0.16	0.20	**0.26**	0.36
	5L 660 27 . 075	0.60	0.30	0.11	0.16	0.22	0.27	**0.35**	0.49
90°	**5L 660 21 . 090**	0.40	0.20	-	0.08	0.11	0.14	**0.18**	0.25
	5L 660 27 . 090	0.60	0.30	0.11	0.16	0.22	0.27	**0.35**	0.49
	5L 660 30 . 090	0.70	0.40	0.16	0.23	0.32	0.39	**0.51**	0.72
	5L 660 33 . 090	0.90	0.50	0.22	0.32	0.45	0.55	**0.71**	1.01
	5L 660 36 . 090	1.00	0.50	0.31	0.44	0.63	0.77	**1.00**	1.41
	5L 660 40 . 090	1.20	0.70	0.50	0.71	1.00	1.23	**1.58**	2.24
	5L 660 44 . 090	1.35	0.80	0.62	0.88	1.25	1.53	**1.98**	2.80
	5L 660 48 . 090	1.50	0.80	0.80	1.13	1.60	1.96	**2.53**	3.58
	5L 660 51 . 090	1.65	0.90	0.95	1.34	1.90	2.33	**3.00**	4.25
	5L 660 56 . 090	2.00	1.10	1.25	1.77	2.50	3.06	**3.95**	5.59
	5L 660 60 . 090	2.20	1.20	1.58	2.23	3.15	3.86	**4.98**	7.04
	5L 660 64 . 090	2.50	1.30	2.00	2.83	4.00	4.90	**6.33**	8.94
	5L 660 67 . 090	2.70	1.40	2.38	3.36	4.75	5.82	**7.51**	10.62
	5L 660 72 . 090	3.00	1.70	3.15	4.46	6.30	7.72	**9.96**	14.09
	5L 660 80 . 090	4.00	2.40	5.00	7.07	10.00	12.25	**15.81**	22.36
120°	**5L 660 18 . 120**	0.35	0.20	-	0.06	0.08	0.10	**0.13**	0.18
	5L 660 21 . 120	0.40	0.20	-	0.08	0.11	0.14	**0.18**	0.25
	5L 660 24 . 120	0.50	0.20	-	0.12	0.16	0.20	**0.26**	0.36
	5L 660 27 . 120	0.60	0.30	-	0.16	0.22	0.27	**0.35**	0.49
	5L 660 30 . 120	0.70	0.30	0.16	0.23	0.32	0.39	**0.51**	0.72
	5L 660 33 . 120	0.90	0.40	0.22	0.32	0.45	0.55	**0.71**	1.00
	5L 660 36 . 120	1.00	0.40	0.31	0.44	0.63	0.77	**1.00**	1.41
	5L 660 40 . 120	1.20	0.60	0.50	0.71	1.00	1.23	**1.58**	2.24
	5L 660 44 . 120	1.35	0.60	0.62	0.88	1.25	1.53	**1.98**	2.80
	5L 660 48 . 120	1.50	0.60	0.80	1.13	1.60	1.96	**2.53**	3.58
	5L 660 51 . 120	1.65	0.90	0.95	1.34	1.90	2.33	**3.00**	4.25
	5L 660 56 . 120	2.00	0.90	1.25	1.77	2.50	3.06	**3.95**	5.59
	5L 660 60 . 120	2.20	1.10	1.58	2.23	3.15	3.86	**4.98**	7.04
	5L 660 64 . 120	2.50	1.30	2.00	2.83	4.00	4.90	**6.33**	8.94
	5L 660 72 . 120	3.00	1.60	3.15	4.46	6.30	7.72	**9.96**	14.09
	5L 660 80 . 120	4.00	2.00	5.00	7.07	10.00	12.25	**15.81**	22.36

** Different connection sizes are available upon request

A = equivalent bore diameter E = narrowest free cross section

Order No.: CODE . MATERIAL

Example.: 5L 660 30 . 060 . 3 Type 5L 660 with mentioned Q(lpm)@P(bar), Spray angle: 60˚, S.S.316

SPADFLOW
SPRAYING SYSTEMS AND NOZZLES

Flat-Fan Spray Nozzles
Spadflow Series **5L 664 – 5L 665**

Webpage + STP

5L 664
5L 665

Low Pressure Nozzle with Dovetail Guide

Applications:

- Cleaning installations
- Cooling headers
- Spray pipes
- Roll cooling
- Cooling of rolled stock

Properties:

- Assembly with retaining nut 3/4 BSPT and dovetail guide
- Stable spray angle
- Automatic jet alignment due to dovetail guide
- Uniform, parabolical distribution of liquid

5L 664 – 5L 665

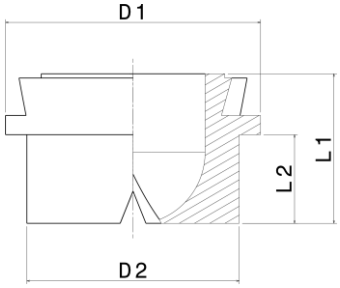

Dimensions [mm]				
D_1	L_1	L_2	D_2	Weight
24.0	14.0	8.0	20.0	35 g

Material*	Code
Brass	1
S.S.304	2
S.S.316	3

* Different materials are available upon request

α	Spray coverage @ 250 mm
20°	100
30°	140
45°	220
60°	280
90°	520
120°	890

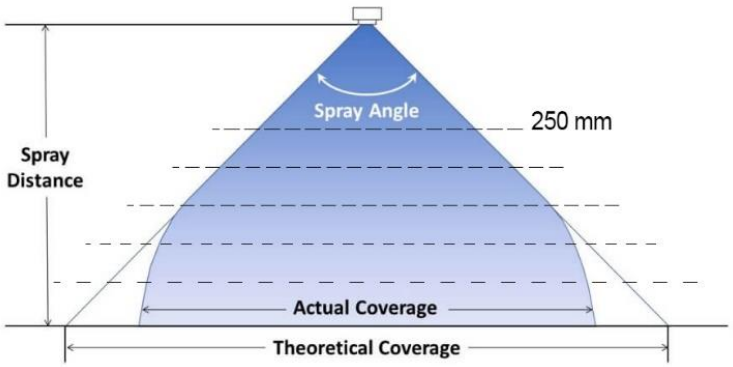

Spray angle (α)	Code	A Ø [mm]	E Ø [mm]	Flow rate [l/min] P [bar] 0.5	1.0 K factor	2.0	3.0	5.0	10.0
20°	**5L 664 72 . 020**	3.00	2.50	3.15	4.45	6.30	7.72	**9.96**	14.09
	5L 664 80 . 020	4.00	3.20	5.00	7.07	10.00	12.25	**15.81**	22.36
	5L 664 88 . 020	5.00	4.00	8.00	11.31	16.00	19.60	**25.30**	35.78
	5L 664 92 . 020	5.50	4.40	10.00	14.14	20.00	24.49	**31.62**	44.72
	5L 664 96 . 020	6.00	5.10	12.50	17.68	25.00	30.62	**39.53**	55.90
30°	**5L 664 72 . 030**	3.00	2.40	3.15	4.45	6.30	7.72	**9.96**	14.09
	5L 664 76 . 030	3.50	2.70	4.00	5.66	8.00	9.80	**12.65**	17.89
	5L 664 80 . 030	4.00	3.10	5.00	7.07	10.00	12.25	**15.81**	22.36
	5L 664 88 . 030	5.00	4.00	8.00	11.31	16.00	19.60	**25.30**	35.78
	5L 664 92 . 030	5.50	4.40	10.00	14.14	20.00	24.49	**31.62**	44.72
	5L 664 96 . 030	6.00	5.00	12.50	17.68	25.00	30.62	**39.53**	55.90
	5L 665 04 . 030	8.00	6.40	20.00	28.28	40.00	48.99	**63.25**	89.44
	5L 665 12 . 030	10.00	8.20	31.50	44.55	63.00	77.16	**99.61**	140.87

038– R01 – C00

Order No.: CODE . MATERIAL

Example.: 5L 664 72 . 060 . 3 Type 5L 664 with mentioned Q(lpm)@P(bar), Spray angle: 60˚, S.S.316

SPADFLOW
SPRAYING SYSTEMS AND NOZZLES

Flat-Fan Spray Nozzles
Spadflow Series **5L 664 – 5L 665**

Webpage + STP

5L 664
5L 665

Spray angle (α)	Code	A Ø [mm]	E Ø [mm]	Flow rate [l/min] P [bar] 0.5	1.0 K factor	2.0	3.0	5.0	10.0
45°	**5L 664 72 . 045**	3.00	2.40	3.15	4.45	6.30	7.72	**9.96**	14.09
	5L 664 76 . 045	3.50	2.60	4.00	5.66	8.00	9.80	**12.65**	17.89
	5L 664 80 . 045	4.00	3.00	5.00	7.07	10.00	12.25	**15.81**	22.36
	5L 664 84 . 045	4.50	3.40	6.25	8.84	12.50	15.31	**19.76**	27.95
	5L 664 88 . 045	5.00	3.80	8.00	11.31	16.00	19.60	**25.30**	35.78
	5L 664 92 . 045	5.50	4.20	10.00	14.14	20.00	24.49	**31.62**	44.72
	5L 664 96 . 045	6.00	4.40	12.50	17.68	25.00	30.62	**39.53**	55.90
	5L 665 04 . 045	8.00	5.90	20.00	28.28	40.00	48.99	**63.25**	89.44
60°	**5L 664 72 . 060**	3.00	2.10	3.15	4.45	6.30	7.72	**9.96**	14.09
	5L 664 76 . 060	3.50	2.30	4.00	5.66	8.00	9.80	**12.65**	17.89
	5L 664 80 . 060	4.00	2.60	5.00	7.07	10.00	12.25	**15.81**	22.36
	5L 664 84 . 060	4.50	3.00	6.25	8.84	12.50	15.31	**19.76**	27.95
	5L 664 88 . 060	5.00	3.40	8.00	11.31	16.00	19.60	**25.30**	35.78
	5L 664 92 . 060	5.50	4.10	10.00	14.14	20.00	24.49	**31.62**	44.72
	5L 664 96 . 060	6.00	4.20	12.50	17.68	25.00	30.62	**39.53**	55.90
	5L 665 04 . 060	8.00	5.50	20.00	28.28	40.00	48.99	**63.25**	89.44
	5L 665 08 . 060	9.00	6.20	25.00	35.36	50.00	61.24	**79.06**	111.80
	5L 665 12 . 060	10.00	7.40	31.50	44.55	63.00	77.16	**99.61**	140.87
90°	**5L 664 72 . 090**	3.00	1.70	3.15	4.45	6.30	7.72	**9.96**	14.09
	5L 664 76 . 090	3.50	1.90	4.00	5.66	8.00	9.80	**12.65**	17.89
	5L 664 80 . 090	4.00	2.40	5.00	7.07	10.00	12.25	**15.81**	22.36
	5L 664 84 . 090	4.50	2.40	6.25	8.84	12.50	15.31	**19.76**	27.95
	5L 664 88 . 090	5.00	3.10	8.00	11.31	16.00	19.60	**25.30**	35.78
	5L 664 92 . 090	5.50	3.60	10.00	14.14	20.00	24.49	**31.62**	44.72
	5L 664 96 . 090	6.00	3.90	12.50	17.68	25.00	30.62	**39.53**	55.90
	5L 665 04 . 090	8.00	4.90	20.00	28.28	40.00	48.99	**63.25**	89.44
	5L 665 12 . 090	10.00	6.40	31.50	44.55	63.00	77.16	**99.61**	140.87
120°	**5L 664 72 . 120**	3.00	1.60	3.15	4.45	6.30	7.72	**9.96**	14.09
	5L 664 76 . 120	3.50	1.70	4.00	5.66	8.00	9.80	**12.65**	17.89
	5L 664 80 . 120	4.00	2.00	5.00	7.07	10.00	12.25	**15.81**	22.36
	5L 664 88 . 120	5.00	2.60	8.00	11.31	16.00	19.60	**25.30**	35.78
	5L 664 92 . 120	5.50	2.90	10.00	14.14	20.00	24.49	**31.62**	44.72
	5L 664 96 . 120	6.00	3.20	12.50	17.68	25.00	30.62	**39.53**	55.90
	5L 665 04 . 120	8.00	4.40	20.00	28.28	40.00	48.99	**63.25**	89.44

A = equivalent bore diameter E = narrowest free cross section

Order No.: CODE . MATERIAL

Example.: 5L 664 72 . 060 . 3 Type 5L 664 with mentioned Q(lpm)@P(bar), Spray angle: 60˚, S.S.316

SPADFLOW
SPRAYING SYSTEMS AND NOZZLES

Flat-Fan Spray Nozzles
Spadflow Series **5L 652**

Webpage + STP

5L 652

Low Pressure Nozzle for Retaining Nut

Applications:

- Spray cleaning
- Surface cleaning
- Filter cleaning
- Coating processes
- Belt cleaning
- Lubrication processes

Properties:

- Assembly with retaining nut 3/8 BSPT and dovetail guide
- Stable spray angle
- Uniform, parabolical distribution of liquid

5L 652

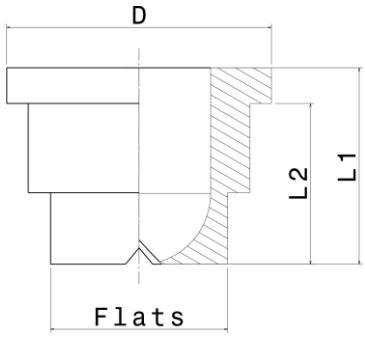

Dimensions [mm]					Weight
D_1	L_1	L_2	D_2	Flats	
14.8	11.0	2.0	14.8	10.0	10 g

Material*	Code
Brass	1
S.S.304	2
S.S.316	3

* Different materials are available upon request

α	Spray coverage @ 250 mm
20°	85
30°	120-140
45°	170-220
60°	260-290
75°	380
90°	420-540
120°	630-900

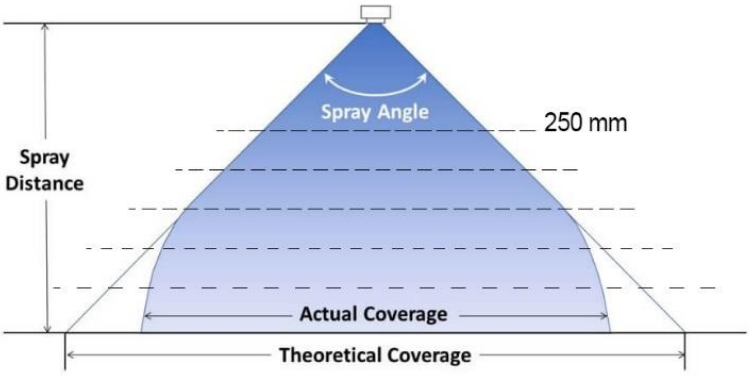

Spray angle (α)	Code	A Ø [mm]	E Ø [mm]	Flow rate [l/min] P [bar] 0.5	1.0 K factor	2.0	3.0	5.0	10.0
20°	**5L 652 30 . 020**	0.70	0.60	0.16	0.23	0.32	0.39	**0.51**	0.72
	5L 652 36 . 020	1.00	0.80	0.31	0.44	0.63	0.77	**1.00**	1.40
	5L 652 44 . 020	1.35	1.10	0.62	0.88	1.25	1.53	**1.98**	2.80
	5L 652 48 . 020	1.50	1.20	0.80	1.13	1.60	1.96	**2.53**	3.58
30°	**5L 652 30 . 030**	0.60	0.50	0.16	0.23	0.32	0.40	**0.51**	0.72
	5L 652 36 . 030	1.00	0.70	0.32	0.45	0.63	0.77	**1.00**	1.41
	5L 652 40 . 030	1.20	0.90	0.50	0.71	1.00	1.22	**1.58**	2.23
	5L 652 48 . 030	1.50	1.10	0.80	1.13	1.60	1.96	**2.53**	3.58
	5L 652 56 . 030	2.00	1.50	1.25	1.77	2.50	3.06	**3.95**	5.59
	5L 652 64 . 030	2.50	1.80	2.00	2.83	4.00	4.90	**6.33**	8.95
	5L 652 72 . 030	3.00	2.40	3.15	4.45	6.30	7.71	**9.96**	14.09
	5L 652 76 . 030	3.50	2.70	4.00	5.66	8.00	9.80	**12.65**	17.89
	5L 652 80 . 030	4.00	3.10	5.00	7.07	10.00	12.25	**15.81**	22.36

038– R01 – C00

Order No.: CODE . MATERIAL

Example.: 5L 652 30 . 060 . 3 Type 5L 652 with mentioned Q(lpm)@P(bar), Spray angle: 60˚, S.S.316

SPADFLOW
SPRAYING SYSTEMS AND NOZZLES

Flat-Fan Spray Nozzles
Spadflow Series **5L 652**

Webpage + STP

5L 652

Spray angle (α)	Code	A Ø [mm]	E Ø [mm]	Flow rate [l/min] P [bar] 0.5	1.0 K factor	2.0	3.0	5.0	10.0
45°	**5L 652 30 . 045**	0.70	0.50	0.16	0.23	0.32	0.40	**0.51**	0.72
	5L 652 36 . 045	1.00	0.60	0.32	0.45	0.63	0.77	**1.00**	1.41
	5L 652 40 . 045	1.20	0.90	0.50	0.71	1.00	1.22	**1.58**	2.23
	5L 652 48 . 045	1.50	1.10	0.80	1.13	1.60	1.96	**2.53**	3.58
	5L 652 56 . 045	2.00	1.40	1.25	1.77	2.50	3.06	**3.95**	5.59
	5L 652 64 . 045	2.50	1.80	2.00	2.83	4.00	4.90	**6.33**	8.95
	5L 652 72 . 045	3.00	2.40	3.15	4.45	6.30	7.71	**9.96**	14.09
	5L 652 76 . 045	3.50	2.60	4.00	5.66	8.00	9.80	**12.65**	17.89
	5L 652 80 . 045	4.00	3.00	5.00	7.07	10.00	12.25	**15.81**	22.36
60°	**5L 652 30 . 060**	0.70	0.40	0.16	0.23	0.32	0.40	**0.51**	0.72
	5L 652 33 . 060	0.90	0.50	0.22	0.32	0.45	0.55	**0.71**	1.00
	5L 652 36 . 060	1.00	0.60	0.32	0.45	0.63	0.77	**1.00**	1.41
	5L 652 40 . 060	1.20	0.80	0.50	0.71	1.00	1.22	**1.58**	2.23
	5L 652 44 . 060	1.35	0.90	0.63	0.89	1.25	1.53	**1.98**	2.80
	5L 652 48 . 060	1.50	1.00	0.80	1.13	1.60	1.96	**2.53**	3.58
	5L 652 51 . 060	1.65	1.10	0.95	1.34	1.90	2.32	**3.00**	4.24
	5L 652 56 . 060	2.00	1.30	1.25	1.77	2.50	3.06	**3.95**	5.59
	5L 652 60 . 060	2.20	1.50	1.57	2.23	3.15	3.86	**4.98**	7.04
	5L 652 64 . 060	2.50	1.60	2.00	2.83	4.00	4.90	**6.33**	8.95
	5L 652 67 . 060	2.70	1.80	2.37	3.36	4.75	5.82	**7.51**	10.62
	5L 652 72 . 060	3.00	2.10	3.15	4.45	6.30	7.71	**9.96**	14.09
	5L 652 76 . 060	3.50	2.30	4.00	5.66	8.00	9.80	**12.65**	17.89
	5L 652 80 . 060	4.00	2.60	5.00	7.07	10.00	12.25	**15.81**	22.36
	5L 652 84 . 060	4.50	3.00	6.25	8.84	12.50	15.31	**19.76**	27.94
	5L 652 88 . 060	5.00	3.40	8.00	11.31	16.00	19.60	**25.30**	35.78
75°	**5L 652 14 . 075**	0.20	0.12	–	0.04	0.05	0.06	**0.08**	0.11
	5L 652 16 . 075	0.20	0.14	–	0.05	0.07	0.08	**0.10**	0.14
	5L 652 18 . 075	0.20	0.16	–	0.06	0.08	0.10	**0.13**	0.18
	5L 652 21 . 075	0.40	0.20	–	0.08	0.11	0.14	**0.18**	0.25
	5L 652 24 . 075	0.50	0.30	–	0.12	0.16	0.20	**0.26**	0.37
	5L 652 27 . 075	0.60	0.30	0.11	0.16	0.22	0.27	**0.35**	0.49
90°	**5L 652 21 . 090**	0.40	0.20	0.06	0.08	0.11	0.14	**0.18**	0.25
	5L 652 24 . 090	0.50	0.30	0.08	0.12	0.16	0.20	**0.26**	0.37
	5L 652 27 . 090	0.60	0.30	0.11	0.16	0.22	0.27	**0.35**	0.49
	5L 652 30 . 090	0.70	0.40	0.16	0.23	0.32	0.40	**0.51**	0.72
	5L 652 33 . 090	0.90	0.50	0.22	0.32	0.45	0.55	**0.71**	1.00
	5L 652 36 . 090	1.00	0.50	0.32	0.45	0.63	0.77	**1.00**	1.41
	5L 652 40 . 090	1.20	0.70	0.50	0.71	1.00	1.22	**1.58**	2.23
	5L 652 44 . 090	1.35	0.80	0.63	0.89	1.25	1.53	**1.98**	2.80
	5L 652 48 . 090	1.50	0.80	0.80	1.13	1.60	1.96	**2.53**	3.58
	5L 652 51 . 090	1.65	0.90	0.95	1.34	1.90	2.32	**3.00**	4.24
	5L 652 56 . 090	2.00	1.10	1.25	1.77	2.50	3.06	**3.95**	5.59
	5L 652 60 . 090	2.20	1.20	1.57	2.23	3.15	3.86	**4.98**	7.04
	5L 652 64 . 090	2.50	1.30	2.00	2.83	4.00	4.90	**6.33**	8.95
	5L 652 67 . 090	2.70	1.40	2.37	3.36	4.75	5.82	**7.51**	10.62
	5L 652 72 . 090	3.00	1.70	3.15	4.45	6.30	7.71	**9.96**	14.09
	5L 652 76 . 090	3.50	1.90	4.00	5.66	8.00	9.80	**12.65**	17.89
	5L 652 80 . 090	4.00	2.40	5.00	7.07	10.00	12.25	**15.81**	22.36
	5L 652 84 . 090	4.50	2.40	6.25	8.84	12.50	15.31	**19.76**	27.94
	5L 652 88 . 090	5.00	3.10	8.00	11.31	16.00	19.60	**25.30**	35.78
120°	**5L 652 18 . 120**	0.35	0.20	–	0.06	0.08	0.10	**0.13**	0.18
	5L 652 21 . 120	0.40	0.20	–	0.08	0.11	0.14	**0.18**	0.25
	5L 652 24 . 120	0.50	0.20	–	0.12	0.16	0.20	**0.26**	0.37
	5L 652 27 . 120	0.60	0.30	–	0.16	0.22	0.27	**0.35**	0.49
	5L 652 30 . 120	0.70	0.30	0.16	0.23	0.32	0.40	**0.51**	0.72
	5L 652 33 . 120	0.90	0.40	0.22	0.32	0.45	0.55	**0.71**	1.00
	5L 652 36 . 120	1.00	0.50	0.32	0.45	0.63	0.77	**1.00**	1.41
	5L 652 40 . 120	1.20	0.60	0.50	0.71	1.00	1.22	**1.58**	2.23
	5L 652 44 . 120	1.35	0.60	0.63	0.89	1.25	1.53	**1.98**	2.80
	5L 652 48 . 120	1.50	0.60	0.80	1.13	1.60	1.96	**2.53**	3.58

Order No.: CODE . MATERIAL

Example.: 5L 652 30 . 060 . 3 Type 5L 652 with mentioned Q(lpm)@P(bar), Spray angle: 60˚, S.S.316

Flat-Fan Spray Nozzles
Spadflow Series **5L 652**

Webpage + STP

Spray angle (α)	Code	A Ø [mm]	E Ø [mm]	Flow rate [l/min] P [bar] 0.5	1.0 K factor	2.0	3.0	5.0	10.0
	5L 652 51 . 120	1.65	0.90	0.95	1.34	1.90	2.32	**3.00**	4.24
	5L 652 56 . 120	2.00	0.90	1.25	1.77	2.50	3.06	**3.95**	5.59
	5L 652 60 . 120	2.20	1.10	1.57	2.23	3.15	3.86	**4.98**	7.04
	5L 652 64 . 120	2.50	1.30	2.00	2.83	4.00	4.90	**6.33**	8.95
	5L 652 67 . 120	2.70	1.40	2.37	3.36	4.75	5.82	**7.51**	10.62
	5L 652 72 . 120	3.00	1.60	3.15	4.45	6.30	7.71	**9.96**	14.09
	5L 652 76 . 120	3.50	1.70	4.00	5.66	8.00	9.80	**12.65**	17.89
	5L 652 80 . 120	4.00	2.00	6.25	8.84	12.50	15.31	**19.76**	27.94
	5L 652 88 . 120	5.00	2.60	8.00	11.31	16.00	19.60	**25.30**	35.78

A = equivalent bore diameter E = narrowest free cross section

Order No.: CODE . MATERIAL

Example.: 5L 652 30 . 060 . 3 Type 5L 652 with mentioned Q(lpm)@P(bar), Spray angle: 60˚, S.S.316

SPADFLOW
SPRAYING SYSTEMS AND NOZZLES

Flat-Fan Spray Nozzles
Spadflow Series **5L 656 – 5L 657**

Webpage + STP

5L 656
5L 657

Low Pressure Nozzle for Retaining Nut

Applications:

- Cleaning installations
- Cooling headers
- Spray pipes
- Roll cooling
- Cooling of rolled stock
- Gravel washing

Properties:

- Assembly with retaining nut 3/4 BSPT
- Easy nozzle changing
- Simple jet alignment.
- Uniform, parabolic distribution of liquid
- Increased non-clogging features
- more jet power
- Less fog

5L 656 – 5L 657

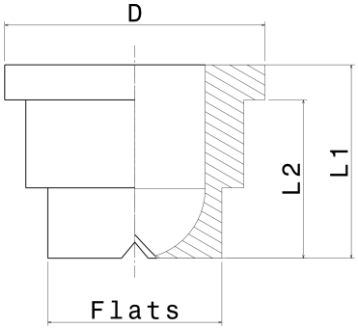

Dimensions [mm]				
D	L_1	L_2	Flat	Weight
24.0	11.0	2.0	17.0	23 g

Material*	Code
Brass	1
S.S.304	2
S.S.316	3

* Different materials are available upon request

α	Spray coverage @ 250 mm
20°	100
30°	140
45°	220
60°	280
90°	520
120°	900

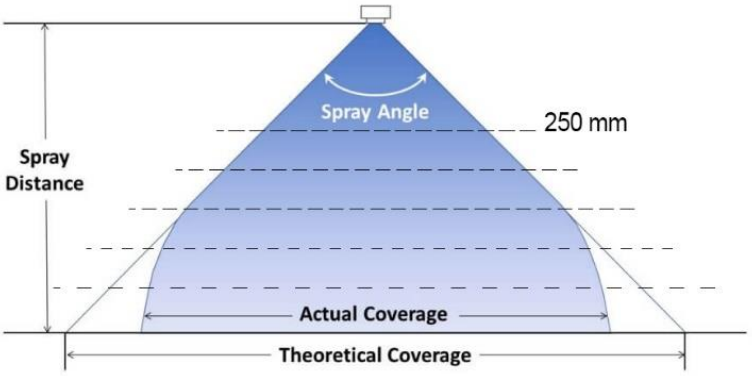

Spray angle (α)	Code	A Ø [mm]	E Ø [mm]	Flow rate [l/min] P [bar] 0.5	1.0 K factor	2.0	3.0	5.0	10.0
20°	**5L 656 72 . 020**	3.00	2.50	3.15	4.45	6.30	7.72	**9.96**	14.09
	5L 656 80 . 020	4.00	3.20	5.00	7.07	10.00	12.25	**15.81**	22.36
	5L 656 88 . 020	5.00	4.00	8.00	11.31	16.00	19.60	**25.30**	35.78
	5L 656 92 . 020	5.50	4.40	10.00	14.14	20.00	24.49	**31.62**	44.72
	5L 656 96 . 020	6.00	5.30	12.50	17.68	25.00	30.62	**39.53**	55.90

038– R01 – C00

Order No.: CODE . MATERIAL

Example.: 5L 656 72 . 060 . 3 Type 5L 656 with mentioned Q(lpm)@P(bar), Spray angle: 60˚, S.S.316

SPADFLOW
SPRAYING SYSTEMS AND NOZZLES

Flat-Fan Spray Nozzles
Spadflow Series **5L 656 – 5L 657**

Webpage + STP

5L 656
5L 657

Spray angle (α)	Code	A Ø [mm]	E Ø [mm]	Flow rate [l/min] P [bar] 0.5	1.0 K factor	2.0	3.0	5.0	10.0
30°	**5L 656 72 . 030**	3.00	2.40	3.15	4.45	6.30	7.72	**9.96**	14.09
	5L 656 76 . 030	3.50	2.70	4.00	5.66	8.00	9.80	**12.65**	17.89
	5L 656 80 . 030	4.00	3.10	5.00	7.07	10.00	12.25	**15.81**	22.36
	5L 656 88 . 030	5.00	4.00	8.00	11.31	16.00	19.60	**25.30**	35.78
	5L 656 92 . 030	5.50	4.40	10.00	14.14	20.00	24.49	**31.62**	44.72
	5L 656 96 . 030	6.00	5.00	12.50	17.68	25.00	30.62	**39.53**	55.90
45°	**5L 656 72 . 045**	3.00	2.40	3.15	4.45	6.30	7.72	**9.96**	14.09
	5L 656 76 . 045	3.50	2.60	4.00	5.66	8.00	9.80	**12.65**	17.89
	5L 656 80 . 045	4.00	3.00	5.00	7.07	10.00	12.25	**15.81**	22.36
	5L 656 84 . 045	4.50	3.40	6.25	8.84	12.50	15.31	**19.76**	27.95
	5L 656 88 . 045	5.00	3.80	8.00	11.31	16.00	19.60	**25.30**	35.78
	5L 656 92 . 045	5.50	4.20	10.00	14.14	20.00	24.49	**31.62**	44.72
	5L 656 96 . 045	6.00	4.40	12.50	17.68	25.00	30.62	**39.53**	55.90
60°	**5L 656 72 . 060**	3.00	2.10	3.15	4.45	6.30	7.72	**9.96**	14.09
	5L 656 76 . 060	3.50	2.30	4.00	5.66	8.00	9.80	**12.65**	17.89
	5L 656 80 . 060	4.00	2.60	5.00	7.07	10.00	12.25	**15.81**	22.36
	5L 656 84 . 060	4.50	3.00	6.25	8.84	12.50	15.31	**19.76**	27.95
	5L 656 88 . 060	5.00	3.40	8.00	11.31	16.00	19.60	**25.30**	35.78
	5L 656 92 . 060	5.50	4.10	10.00	14.14	20.00	24.49	**31.62**	44.72
	5L 656 96 . 060	6.00	4.20	12.50	17.68	25.00	30.62	**39.53**	55.90
	5L 657 04 . 060	8.00	5.50	20.00	28.28	40.00	48.99	**63.25**	89.44
90°	**5L 656 72 . 090**	3.00	1.70	3.15	4.45	6.30	7.72	**9.96**	14.09
	5L 656 76 . 090	3.50	1.90	4.00	5.66	8.00	9.80	**12.65**	17.89
	5L 656 80 . 090	4.00	2.40	5.00	7.07	10.00	12.25	**15.81**	22.36
	5L 656 84 . 090	4.50	2.40	6.25	8.84	12.50	15.31	**19.76**	27.95
	5L 656 88 . 090	5.00	3.10	8.00	11.31	16.00	19.60	**25.30**	35.78
	5L 656 92 . 090	5.50	3.60	10.00	14.14	20.00	24.49	**31.62**	44.72
	5L 656 96 . 090	6.00	3.90	12.50	17.68	25.00	30.62	**39.53**	55.90
	5L 657 04 . 090	8.00	4.90	20.00	28.28	40.00	48.99	**63.25**	89.44
120°	**5L 656 72 . 120**	3.00	1.60	3.15	4.45	6.30	7.72	**9.96**	14.09
	5L 656 76 . 120	3.50	1.70	4.00	5.66	8.00	9.80	**12.65**	17.89
	5L 656 80 . 120	4.00	2.00	5.00	7.07	10.00	12.25	**15.81**	22.36
	5L 656 88 . 120	5.00	2.60	8.00	11.31	16.00	19.60	**25.30**	35.78
	5L 656 92 . 120	5.50	2.90	10.00	14.14	20.00	24.49	**31.62**	44.72

A = equivalent bore diameter E = narrowest free cross section

Order No.: CODE . MATERIAL

Example.: 5L 656 72 . 060 . 3 Type 5L 656 with mentioned Q(lpm)@P(bar), Spray angle: 60˚, S.S.316

SPADFLOW
SPRAYING SYSTEMS AND NOZZLES

Flat-Fan Spray Nozzles
Spadflow Series **5L 688 – 5L 689**

Webpage + STP

5L 688
5L 689

Low Pressure Tongue-Type Nozzle

Applications:

- Cleaning
- Washing
- Degreasing
- Phosphating
- Preparation techniques

Properties:

- High resistance to physical damage
- Sharp flat fan
- Narrowly delimited jet pattern
- Not prone to clogging

5L 688 – 5L 689

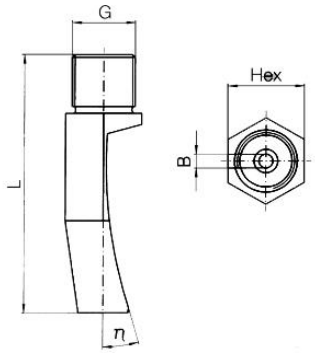

Size	Conn. code			Weight
	BSPT	BSPP	NPT	
3/8”	038T	038P	038N	150 g
1/2”	012T	012P	012N	-
3/4”	034T	034P	034N	306g

Material*	Code
Brass	1
S.S.304	2
S.S.316	3

* Different materials are available upon request

α	Spray coverage @ 250 mm
15°	65
30°	135
45°	220

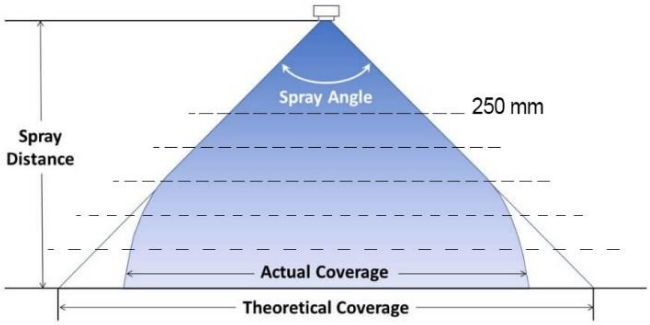

Spray angle (α)	Code	η	Connection** [Inch]	B Ø [mm]	Flow rate [l/min] P [bar] 1.0 K factor	2.0	5.0	Dimensions L [mm] R 3/8	R 1/2	R 3/4	Hex [mm] R 3/8	R 1/2	R 3/4
15°	**5L 688 92 . 015**	10°	**1/2"**	4.7	14.14	**20**	31.62	-	103	-	-	22	-
	5L 689 00 . 015	9°	**3/4"**	6	22.27	**31.5**	49.81	-	-	141	-	-	27
	5L 689 12 . 015	9°	**3/4"**	8.6	44.55	**63**	99.61	-	-	168	-	-	27
30°	**5L 688 92 . 030**	17°	**1/2"**	4.7	14.14	**20**	31.62	-	73	-	-	22	-
	5L 689 00 . 030	17°	**3/4"**	6	22.27	**31.5**	49.81	-	-	86,5	-	-	27
	5L 689 08 . 030	15°	**1/2" - 3/4"**	7.6	35.36	**50**	79.06	-	-	97,5	-	-	27
	5L 689 12 . 030	15°	**3/4"**	8.6	44.55	**63**	99.61	-	-	108,5	-	-	27
45°	**5L 688 76 . 045**	35°	**3/8"**	3	5.66	**8**	12.65	42	-	-	19	-	-
	5L 688 84 . 045	30°	**3/8"**	3.8	8.84	**12.5**	19.76	49,5	-	-	19	-	-
	5L 688 92 . 045	29°	**3/8"**	4.8	14.14	**20**	31.62	58,5	-	-	22	-	-
	5L 688 92 . 045	29°	**3/8"**	4.8	14.14	**20**	31.62	54	-	-	22	-	-
	5L 689 00 . 045	35°	**3/8" - 1/2" - 3/4"**	6	22.27	**31.5**	49.81	65	-	73,5	24	-	27
	5L 689 04 . 045	21°	**3/8"**	6.9	28.28	**40**	63.25	66,5	-	-	24	-	-
	5L 689 08 . 045	18°	**3/4"**	7.6	35.36	**50**	79.06	-	-	73,5	-	-	27
	5L 689 12 . 045	18°	**3/8"**	8.6	44.55	**63**	99.61	78,5	-	-	24	-	-

** Different connection sizes are available upon request
B = bore diameter

038– R01 – C00

Order No.: CODE . CONNETION . MATERIAL

Example: 5L 688 76. 045. 038T . 3 Type 5L 688 with mentioned Q(lpm)@P(bar), Spray angle: 45˚, 3/8” BSPT, S.S.316

SPADFLOW
SPRAYING SYSTEMS AND NOZZLES

Flat-Fan Spray Nozzles
Spadflow Series **5M LD**

Webpage + STP

5M LD

Low Pressure Tongue-Type Nozzle

Applications:

- Cleaning
- Rinsing
- Degreasing
- Phosphating
- Process Engineering

Properties:

- Square section
- High resistance to physical damage
- Sharp flat fan
- Narrowly delimited jet pattern
- Not prone to clogging

5M LD

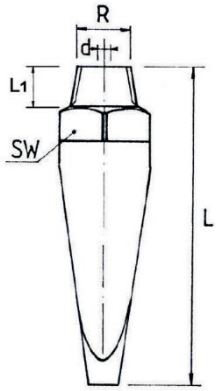

Size	Conn. code			Weight
	BSPT	BSPP	NPT	
1/4”	014T	014P	014N	-
3/8”	038T	038P	038N	150 g
1/2”	012T	012P	012N	-
3/4”	034T	034P	034N	306g

Material*	Code
Brass	1
S.S.304	2
S.S.316	3

* Different materials are available upon request

α	Spray coverage @ 250 mm
15°	65
25°	110
30°	130
40°	180
50°	230

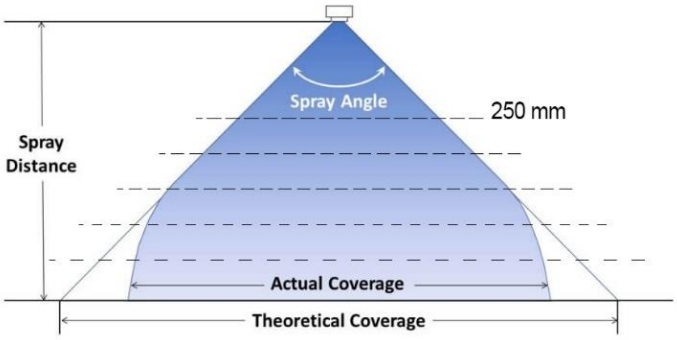

Spray angle (α)	Code	η	Connection** [Inch]	B Ø [mm]	Flow rate [l/min] P [bar] 1.0 K factor	2.0	3.0	5.0	10.0	Dimensions [mm] L	L1	SW
15°	**5M LD 10 . 015**	22°	**1/4"**	2	2.3	3.3	3.8	**5**	7	48	10	16
	5M LD 20 . 015	19°	**1/4"**	2.8	4.5	6.5	7.5	**10**	15	54	10	16
	5M LD 30 . 015	25°	**3/8"**	3.2	7	10	11	**15**	22	72	10	20
	5M LD 40 . 015	19°	**3/8"**	3.5	9.5	13	15	**20**	29	92	10	20
	5M LD 50 . 015	15°	**3/8"**	4	12	16	19	**25**	37	91	10	20
	5M LD 60 . 015	14°	**1/2"**	4.6	13.5	19.2	23	**30**	43	125	13	25
	5M LD 80 . 015	14°	**1/2"**	5.3	18.1	26	31	**40**	57	130	13	25
	5M LD 100 . 015	14°	**1/2"**	6	23	33	39	**50**	73	137	13	25
	5M LD 200 . 015	14°	**3/4"**	8.4	45	64	78	**101**	143	191	15	30

038– R01 – C00

Order No.: CODE . CONNETION . MATERIAL

Example: 5M LD 10. 015. 014T . 3 Type 5M LD with mentioned Q(lpm)@P(bar), Spray angle: 15˚, 1/4” BSPT, S.S.316

SPADFLOW
SPRAYING SYSTEMS AND NOZZLES

Flat-Fan Spray Nozzles
Spadflow Series **5M LD**

Webpage + STP

5M LD

Spray angle (α)	Code	η	Connection** [Inch]	B Ø [mm]	Flow rate [l/min] P [bar] 1.0 K factor	2.0	3.0	5.0	10.0	Dimensions [mm] L	L1	SW
25°	**5M LD 40 . 025**	25°	**1/4"**	3.7	9	12.8	15.5	**20**	29	65	10	19
35°	**5M LD 04 . 035**	40°	**1/8"**	1.2	0.9	1.3	1.6	**2**	2.9	23	7	16
	5M LD 10 . 035	35°	**1/4"**	2	2.3	3.3	3.8	**5**	7	37	10	16
	5M LD 20 . 035	30°	**1/4"-3/8"**	2.6	4.5	6.4	7.8	**10.1**	14.3	42	10	20
	5M LD 25 . 035	28°	**1/4"-3/8"**	2.9	5.6	8	9.8	**12.6**	17.9	49	10	20
	5M LD 30 . 035	28°	**3/8"**	3.3	6.8	9.6	11.7	**15.1**	21	52	10	20
	5M LD 40 . 035	25°	**3/8"**	3.5	9.5	13	15	**22**	29	58	10	20
	5M LD 50 . 035	23°	**3/8"**	4	12	16	19	**25**	37	64	10	20
	5M LD 60 . 035	27°	**1/2"**	4.5	13.5	19.1	23	**30**	43	73	13	25
	5M LD 80 . 035	24°	**1/2"**	5.2	18	26	30	**40**	58	81	13	25
	5M LD 100 . 035	20°	**1/2"**	6	23	33	38	**50**	73	89	13	25
	5M LD 160 . 035	23°	**3/4"**	7.5	37	52	60	**80**	177	114	15	30
	5M LD 200 . 035	23°	**3/4"**	8.4	45	64	78	**101**	143	122	15	30
40°	**5M LD 40 . 040**	35°	**3/8"**	3.5	9.5	13	15	**20**	29	60	10	30
	5M LD 50 . 040	34°	**3/8"**	4	12	16	19	**25**	37	64	10	25
	5M LD 60 . 040	33°	**3/8"**	4.5	13.5	19.1	23	**30**	43	72	10	25
	5M LD 70 . 040	29°	**3/8"**	5	15.8	22	27	**35**	50	75	10	25
	5M LD 80 . 040	26°	**3/8"**	5.2	18	26	30	**40**	58	77	10	25
	5M LD 90 . 040	28°	**3/8"**	5.5	21	29	34	**45**	65	77	10	25
	5M LD 100 . 040	28°	**3/8"**	6	23	32	39	**50**	71	87	10	25
50°	**5M LD 10 . 050**	60°	**1/4"**	2	2.3	3.3	3.8	**5**	7	31	10	16
	5M LD 25 . 050	42°	**1/4"-3/8"**	2.9	5.6	8	9.8	**12.6**	17.9	42	10	20
	5M LD 40 . 050	45°	**1/4"-3/8"**	3.5	9	12.8	15.6	**20**	29	47	10	20
	5M LD 60 . 050	37°	**3/8"**	4.4	13.5	19.2	23	**30**	43	55	10	25
	5M LD 100 . 050	40°	**3/8"**	6	23	32	39	**50**	71	72	10	30
	5M LD 125 . 050	40°	**3/8"**	6.7	28	41	49	**63**	89	72	10	30
	5M LD 160 . 050	37°	**3/8"**	7.5	36	51	63	**81**	114	72	10	30
	5M LD 200 . 050	32°	**3/8"**	8.3	46	64	76	**100**	147	72	10	30

** Different connection sizes are available upon request

B = bore diameter

Order No.: CODE . CONNETION . MATERIAL

Example: 5M LD 10. 015. 014T . 3 Type 5M LD with mentioned Q(lpm)@P(bar), Spray angle: 15˚, 1/4" BSPT, S.S.316

SPADFLOW
SPRAYING SYSTEMS AND NOZZLES

Flat-Fan Spray Nozzles
Spadflow Series **5L 686**

Webpage + STP

5L 686

Low Pressure Tongue-type Nozzle

Properties:

- Wide flat fan with a sharply delimited jet pattern
- Particularly clog-proof
- narrowly delimited jet pattern
- Not prone to clogging

Applications:

- Foam control in storage tanks
- Crate washers
- Cleaning and washing processes requiring powerful and concentrated water jets
- Preparation techniques

5L 686

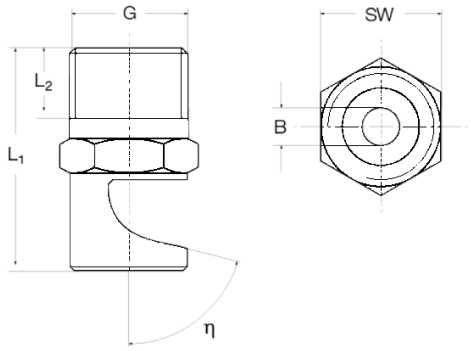

Size	Conn. code			Dimensions [mm]			Weight
	BSPT	BSPP	NPT	L_1	L_2	Hex	
1/8”	018T	018P	018N	23.0	6.5	11	17 g
1/4”	014T	014P	014N	35.0	9.7	14	20 g
3/8”	038T	038P	038N	38.5	10.1	17	30 g
1/2”	012T	012P	012N	45.0	13.2	22	40 g

Material*	Code
Brass	1
S.S.304	2
S.S.316	3

* Different materials are available upon request

α	Spray coverage @ 250 mm
90°	520-530
140°	1360-1370

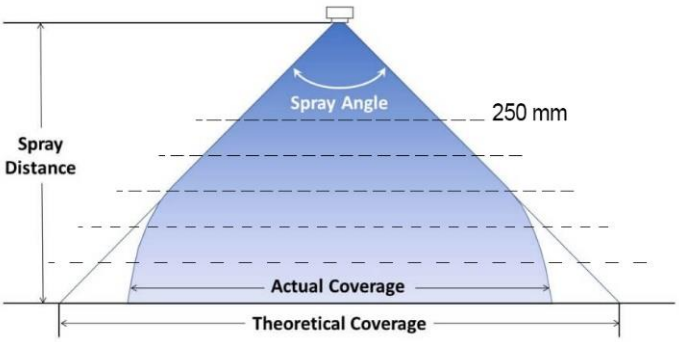

Spray angle (α)	Code	η	Connection** [Inch]	B Ø [mm]	Flow rate [l/min] P [bar] 1.0 K factor	2.0	5.0
90°	**5L 686 36 . 090**	75°	**1/8"-1/4"**	0.80	0.45	**0.63**	1.00
	5L 686 40 . 090	75°	**1/8"-1/4"**	1.00	0.71	**1.00**	1.58
	5L 686 68 . 090	40°	**1/4"**	2.40	3.54	**5.00**	7.91
	5L 686 72 . 090	40°	**1/8"-1/4"**	2.70	4.45	**6.30**	9.96
	5L 686 80 . 090	40°	**1/4"**	3.40	7.07	**10.00**	15.81
	5L 686 88 . 090	40°	**1/4"**	4.20	11.31	**16.00**	25.30
	5L 686 92 . 090	40°	**3/8"**	4.70	14.14	**20.00**	31.62

038– R01 – C00

Order No.: CODE . CONNETION . MATERIAL

Example: 5L 686 36 . 090 . 018T . 3 Type 5L 686 with mentioned Q(lpm)@P(bar), Spray angle: 90˚, 1/8” BSPT, S.S.316

Flat-Fan Spray Nozzles
Spadflow Series **5L 686**

Webpage + STP

Spray angle (α)	Code	η	Connection** [Inch]	B Ø [mm]	Flow rate [l/min] P [bar] 1.0 K factor	2.0	5.0
140°	**5L 686 36 . 140**	75°	**1/8"-1/4"**	0.80	0.45	**0.63**	1.00
	5L 686 40 . 140	75°	**1/8"-1/4"**	1.00	0.71	**1.00**	1.58
	5L 686 44 . 140	75°	**1/4"**	1.20	0.88	**1.25**	1.98
	5L 686 48 . 140	75°	**1/8"1/4"**	1.30	1.13	**1.60**	2.53
	5L 686 52 . 140	75°	**1/8"1/4"**	1.50	1.41	**2.00**	3.16
	5L 686 56 . 140	75°	**1/8"1/4"**	1.70	1.77	**2.50**	3.59
	5L 686 60 . 140	75°	**1/8"1/4"**	1.90	2.23	**3.15**	4.98
	5L 686 64 . 140	75°	**1/4"**	2.20	2.83	**4.00**	6.32
	5L 686 68 . 140	75°	**1/8"1/4"**	2.40	3.54	**5.00**	7.91
	5L 686 72 . 140	75°	**1/8"1/4"**	2.70	4.45	**6.30**	9.96
	5L 686 76 . 140	75°	**1/4"**	3.00	5.66	**8.00**	12.65
	5L 686 80 . 140	75°	**1/8"1/4"**	3.40	7.07	**10.00**	15.81
	5L 686 82 . 140	75°	**1/4"**	3.60	7.92	**11.20**	17.71
	5L 686 84 . 140	75°	**1/4"**	3.80	8.80	**12.50**	19.76
	5L 686 86 . 140	75°	**1/4"**	4.00	9.90	**14.00**	22.14
	5L 686 88 . 140	75°	**1/4"**	4.20	11.31	**16.00**	25.30
	5L 686 90 . 140	75°	**1/4"**	4.50	12.73	**18.00**	28.46
	5L 686 92 . 140	75°	**3/8"**	4.70	14.14	**20.00**	31.62
	5L 686 96 . 140	75°	**1/2"**	5.30	17.68	**25.00**	39.53
	5L 686 98 . 140	75°	**3/8"1/2"**	5.60	19.80	**28.00**	44.27

** Different connection sizes are available upon request

B = bore diameter

Order No.: CODE . CONNETION . MATERIAL

Example: 5L 686 36 . 090 . 018T . 3 Type 5L 686 with mentioned Q(lpm)@P(bar), Spray angle: 90˚, 1/8" BSPT, S.S.316

SPADFLOW
SPRAYING SYSTEMS AND NOZZLES

Flat-Fan Spray Nozzles
Spadflow Series **5B NF**

Webpage + STP

5B NF

Low Pressure Nozzle for Retaining Nut

Applications:

- Applying additives
- Dust removal
- Car wash
- Coating processes
- Fire protection wall
- Lubrication processes
- Roll cooling
- Washing conveyer

Properties:

- One-piece construction
- No internal parts
- Sizes for all applications
- Male connection
- High impact
- Uniform distribution with tapered edges for overlapping sprays
- Extra-wide angles available

5B NF

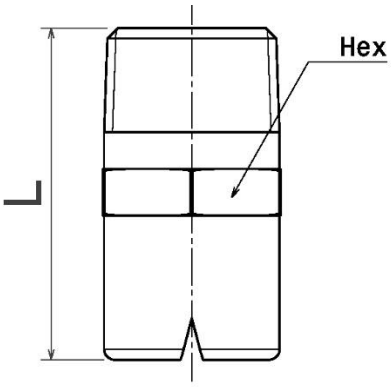

Size	Conn. code			Dimensions [mm]		Weight (g) (metal)
	BSPT	BSPP	NPT	L_1	Hex	
1/8	018T	018P	018N	22.2	11.1	28.4
1/4	014T	014P	014N	27.0	14.3	42.5
3/8	038T	038P	038N	31.8	17.5	56.7
1/2	012T	012P	012N	38.1	22.2	85.1
3/4	034T	034P	034N	44.5	28.6	170
1	100T	100P	100N	55.6	34.9	227
1 1/4	114T	114P	114N	63.5	44.5	340
1 1/2	112T	112P	112N	76.2	50.8	567
2	200T	200P	200N	88.9	63.5	1588

Material*	Code
Brass	1
S.S.304	2
S.S.316	3

* Different materials are available upon request

α	Spray coverage @ 250 mm
15°	60
30°	120
50°	220
65°	300
80°	400
90°	500
110°	680
120°	800

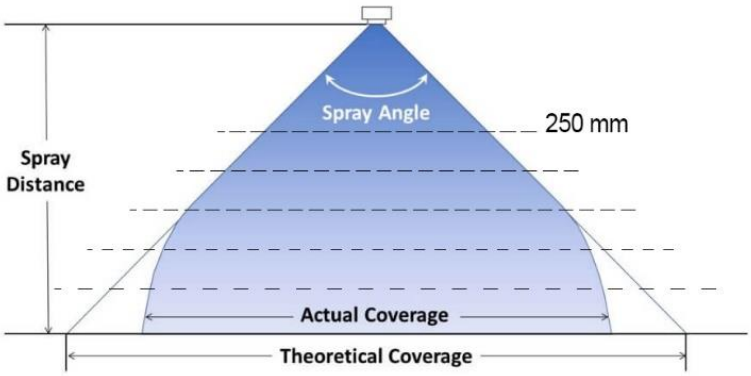

038– R01 – C00

Order No.: CODE . CONNETION . MATERIAL

Example: 5B NF 30 . 030 . 014T . 3 Type 5B NF with mentioned Q(lpm)@P(bar), Spray angle: 30˚, 1/4" BSPT, S.S.316

SPADFLOW
SPRAYING SYSTEMS AND NOZZLES

Flat-Fan Spray Nozzles
Spadflow Series **5B NF**

Webpage + STP

5B NF

Spray angle (α)	Code	Connection** [inch]	A Ø [mm]	Flow rate [l/min] P [bar] 0.5	0.7	1.0 K factor	2.0	3.0	5.0	10	30
15°	5B NF01 . 015	1/8"-1/4"	0.66	0.16	0.19	0.23	0.32	0.39	**0.51**	0.72	1.25
	5B NF015 . 015	1/8"-1/4"	0.79	0.24	0.29	0.34	0.48	0.59	**0.76**	1.08	1.87
	5B NF02 . 015	1/8"-1/4"	0.91	0.32	0.38	0.46	0.64	0.79	**1.02**	1.44	2.49
	5B NF025 . 015	1/8"-1/4"	1.02	0.4	0.48	0.57	0.81	0.99	**1.27**	1.8	3.12
	5B NF03 . 015	1/8"-1/4"	1.09	0.48	0.57	0.68	0.97	1.18	**1.53**	2.16	3.74
	5B NF04 . 015	1/8"-1/4"	1.32	0.64	0.76	0.91	1.29	1.58	**2.04**	2.88	4.99
	5B NF05 . 015	1/8"-1/4"	1.45	0.81	0.95	1.14	1.61	1.97	**2.55**	3.6	6.24
	5B NF06 . 015	1/8"-1/4"	1.57	0.97	1.14	1.37	1.93	2.37	**3.06**	4.33	7.49
	5B NF08 . 015	1/8"-1/4"	1.83	1.28	1.52	1.82	2.57	3.15	**4.06**	5.74	9.95
	5B NF10 . 015	1/8"-1/4"-3/8"	2.03	1.61	1.91	2.28	3.22	3.95	**5.1**	7.21	12.5
	5B NF15 . 015	1/8"-1/4"-3/8"	2.38	2.42	2.86	3.42	4.83	5.92	**7.64**	10.8	18.7
	5B NF20 . 015	1/8"-1/4"-3/8"	2.78	3.22	3.81	4.56	6.45	7.89	**10.2**	14.4	25
	5B NF30 . 015	1/8"-1/4"-3/8"	3.57	4.83	5.72	6.84	9.67	11.8	**15.3**	21.6	37.4
	5B NF40 . 015	1/8"-1/4"-3/8"	3.97	6.45	7.63	9.12	12.9	15.8	**20.4**	28.8	49.9
	5B NF50 . 015	1/4"-3/8"	4.37	8.06	9.53	11.4	16.1	19.7	**25.5**	36	62.4
	5B NF60 . 015	1/4"-3/8"-1/2"	4.76	9.67	11.4	13.7	19.3	23.7	**30.6**	43.2	74.9
	5B NF70 . 015	1/4"-3/8"-1/2"	5.16	11.3	13.3	16	22.6	27.6	**35.7**	50.4	87.4
	5B NF80 . 015	3/8"-1/2"	5.56	12.9	15.3	18.2	25.8	31.6	**40.8**	57.7	99.9
	5B NF90 . 015	3/8"-1/2"	5.95	14.5	17.2	20.5	29	35.5	**45.9**	64.9	112
	5B NF100 . 015	3/8"-1/2"	6.35	16.1	19.1	22.8	32.2	39.5	**51**	72.1	125
	5B NF120 . 015	3/8"-1/2"	6.75	19.3	22.9	27.3	38.7	47.4	**61.1**	86.5	150
	5B NF150 . 015	1/2"	7.54	24.2	28.6	34.2	48.3	59.2	**76.4**	108	187
	5B NF200 . 015	1/2"	8.73	32.2	38.1	45.6	64.5	78.9	**102**	144	250
	5B NF300 . 015	3/4"	10.7	48.3	57.2	68.4	96.7	118	**153**	216	374
	5B NF400 . 015	3/4"-1"	12.7	64.5	76.3	91.2	129	158	**204**	288	499
	5B NF750 . 015	1"	17.5	121	143	171	242	296	**382**	540	936
	5B NF800 . 015	1 1/4"	18.3	129	153	182	258	316	**408**	577	999
	5B NF1150 . 015	1 1/4"	21.8	185	219	262	371	454	**586**	829	1440
	5B NF1500 . 015	1 1/2"	24.6	242	286	342	483	592	**764**	1080	1870
	5B NF2250 . 015	2"	30.2	362	429	513	725	890	**1150**	1620	2810
30°	5B NF01 . 030	1/8"-1/4"	0.66	0.16	0.19	0.23	0.32	0.39	**0.51**	0.72	1.25
	5B NF015 . 030	1/8"-1/4"	0.79	0.24	0.29	0.34	0.48	0.59	**0.76**	1.08	1.87
	5B NF02 . 030	1/8"-1/4"	0.91	0.32	0.38	0.46	0.64	0.79	**1.02**	1.44	2.49
	5B NF025 . 030	1/8"-1/4"	1.02	0.4	0.48	0.57	0.81	0.99	**1.27**	1.8	3.12
	5B NF03 . 030	1/8"-1/4"	1.09	0.48	0.57	0.68	0.97	1.18	**1.53**	2.16	3.74
	5B NF04 . 030	1/8"-1/4"	1.32	0.64	0.76	0.91	1.29	1.58	**2.04**	2.88	4.99
	5B NF05 . 030	1/8"-1/4"	1.45	0.81	0.95	1.14	1.61	1.97	**2.55**	3.6	6.24
	5B NF06 . 030	1/8"-1/4"	1.57	0.97	1.14	1.37	1.93	2.37	**3.06**	4.33	7.49
	5B NF08 . 030	1/8"-1/4"	1.83	1.28	1.52	1.82	2.57	3.15	**4.06**	5.74	9.95
	5B NF10 . 030	1/8"-1/4"-3/8"	2.03	1.61	1.91	2.28	3.22	3.95	**5.1**	7.21	12.5
	5B NF15 . 030	1/8"-1/4"-3/8"	2.38	2.42	2.86	3.42	4.83	5.92	**7.64**	10.8	18.7
	5B NF20 . 030	1/8"-1/4"-3/8"	2.78	3.22	3.81	4.56	6.45	7.89	**10.2**	14.4	25
	5B NF30 . 030	1/8"-1/4"-3/8"	3.57	4.83	5.72	6.84	9.67	11.8	**15.3**	21.6	37.4
	5B NF40 . 030	1/8"-1/4"-3/8"	3.97	6.45	7.63	9.12	12.9	15.8	**20.4**	28.8	49.9
	5B NF50 . 030	1/4"-3/8"	4.37	8.06	9.53	11.4	16.1	19.7	**25.5**	36	62.4
	5B NF60 . 030	1/4"-3/8"-1/2"	4.76	9.67	11.4	13.7	19.3	23.7	**30.6**	43.2	74.9
	5B NF70 . 030	1/4"-3/8"-1/2"	5.16	11.3	13.3	16	22.6	27.6	**35.7**	50.4	87.4
	5B NF80 . 030	3/8"-1/2"	5.56	12.9	15.3	18.2	25.8	31.6	**40.8**	57.7	99.9
	5B NF90 . 030	3/8"-1/2"	5.95	14.5	17.2	20.5	29	35.5	**45.9**	64.9	112
	5B NF100 . 030	3/8"-1/2"	6.35	16.1	19.1	22.8	32.2	39.5	**51**	72.1	125
	5B NF120 . 030	3/8"-1/2"	6.75	19.3	22.9	27.3	38.7	47.4	**61.1**	86.5	150
	5B NF150 . 030	1/2"	7.54	24.2	28.6	34.2	48.3	59.2	**76.4**	108	187
	5B NF200 . 030	1/2"	8.73	32.2	38.1	45.6	64.5	78.9	**102**	144	250
	5B NF300 . 030	3/4"	10.7	48.3	57.2	68.4	96.7	118	**153**	216	374
	5B NF400 . 030	3/4"-1"	12.7	64.5	76.3	91.2	129	158	**204**	288	499
	5B NF750 . 030	1"	17.5	121	143	171	242	296	**382**	540	936
	5B NF800 . 030	1 1/4"	18.3	129	153	182	258	316	**408**	577	999
	5B NF1150 . 030	1 1/4"	21.8	185	219	262	371	454	**586**	829	1440
	5B NF1500 . 030	1 1/2"	24.6	242	286	342	483	592	**764**	1080	1870

Order No.: CODE . CONNETION . MATERIAL

Example: 5B NF 30 . 030 . 014T . 3 Type 5B NF with mentioned Q(lpm)@P(bar), Spray angle: 30˚, 1/4" BSPT, S.S.316

SPADFLOW
SPRAYING SYSTEMS AND NOZZLES

Flat-Fan Spray Nozzles
Spadflow Series **5B NF**

Webpage + STP

5B NF

Spray angle (α)	Code	Connection** [inch]	A Ø [mm]	Flow rate [l/min] P [bar] 0.5	0.7	1.0 K factor	2.0	3.0	5.0	10	30
	5B NF2250 . 030	**2"**	30.2	362	429	513	725	890	**1150**	1620	2810
50°	**5B NF01 . 050**	**1/8"-1/4"**	0.66	0.16	0.19	0.23	0.32	0.39	**0.51**	0.72	1.25
	5B NF015 . 050	**1/8"-1/4"**	0.79	0.24	0.29	0.34	0.48	0.59	**0.76**	1.08	1.87
	5B NF02 . 050	**1/8"-1/4"**	0.91	0.32	0.38	0.46	0.64	0.79	**1.02**	1.44	2.49
	5B NF025 . 050	**1/8"-1/4"**	1.02	0.4	0.48	0.57	0.81	0.99	**1.27**	1.8	3.12
	5B NF03 . 050	**1/8"-1/4"**	1.09	0.48	0.57	0.68	0.97	1.18	**1.53**	2.16	3.74
	5B NF04 . 050	**1/8"-1/4"**	1.32	0.64	0.76	0.91	1.29	1.58	**2.04**	2.88	4.99
	5B NF05 . 050	**1/8"-1/4"**	1.45	0.81	0.95	1.14	1.61	1.97	**2.55**	3.6	6.24
	5B NF06 . 050	**1/8"-1/4"**	1.57	0.97	1.14	1.37	1.93	2.37	**3.06**	4.33	7.49
	5B NF08 . 050	**1/8"-1/4"**	1.83	1.28	1.52	1.82	2.57	3.15	**4.06**	5.74	9.95
	5B NF10 . 050	**1/8"-1/4"-3/8"**	2.03	1.61	1.91	2.28	3.22	3.95	**5.1**	7.21	12.5
	5B NF15 . 050	**1/8"-1/4"-3/8"**	2.38	2.42	2.86	3.42	4.83	5.92	**7.64**	10.8	18.7
	5B NF20 . 050	**1/8"-1/4"-3/8"**	2.78	3.22	3.81	4.56	6.45	7.89	**10.2**	14.4	25
	5B NF30 . 050	**1/8"-1/4"-3/8"**	3.57	4.83	5.72	6.84	9.67	11.8	**15.3**	21.6	37.4
	5B NF40 . 050	**1/8"-1/4"-3/8"**	3.97	6.45	7.63	9.12	12.9	15.8	**20.4**	28.8	49.9
	5B NF50 . 050	**1/4"-3/8"**	4.37	8.06	9.53	11.4	16.1	19.7	**25.5**	36	62.4
	5B NF60 . 050	**1/4"-3/8"-1/2"**	4.76	9.67	11.4	13.7	19.3	23.7	**30.6**	43.2	74.9
	5B NF70 . 050	**1/4"-3/8"-1/2"**	5.16	11.3	13.3	16	22.6	27.6	**35.7**	50.4	87.4
	5B NF80 . 050	**3/8"-1/2"**	5.56	12.9	15.3	18.2	25.8	31.6	**40.8**	57.7	99.9
	5B NF90 . 050	**3/8"-1/2"**	5.95	14.5	17.2	20.5	29	35.5	**45.9**	64.9	112
	5B NF100 . 050	**3/8"-1/2"**	6.35	16.1	19.1	22.8	32.2	39.5	**51**	72.1	125
	5B NF120 . 050	**3/8"-1/2"**	6.75	19.3	22.9	27.3	38.7	47.4	**61.1**	86.5	150
	5B NF150 . 050	**1/2"**	7.54	24.2	28.6	34.2	48.3	59.2	**76.4**	108	187
	5B NF200 . 050	**1/2"**	8.73	32.2	38.1	45.6	64.5	78.9	**102**	144	250
	5B NF300 . 050	**3/4"**	10.7	48.3	57.2	68.4	96.7	118	**153**	216	374
	5B NF400 . 050	**3/4"-1"**	12.7	64.5	76.3	91.2	129	158	**204**	288	499
	5B NF750 . 050	**1"**	17.5	121	143	171	242	296	**382**	540	936
	5B NF800 . 050	**1 1/4"**	18.3	129	153	182	258	316	**408**	577	999
	5B NF1150 . 050	**1 1/4"**	21.8	185	219	262	371	454	**586**	829	1440
	5B NF1500 . 050	**1 1/2"**	24.6	242	286	342	483	592	**764**	1080	1870
	5B NF2250 . 050	**2"**	30.2	362	429	513	725	890	**1150**	1620	2810
65°	**5B NF01 . 065**	**1/8"-1/4"**	0.66	0.16	0.19	0.23	0.32	0.39	**0.51**	0.72	1.25
	5B NF015 . 065	**1/8"-1/4"**	0.79	0.24	0.29	0.34	0.48	0.59	**0.76**	1.08	1.87
	5B NF02 . 065	**1/8"-1/4"**	0.91	0.32	0.38	0.46	0.64	0.79	**1.02**	1.44	2.49
	5B NF025 . 065	**1/8"-1/4"**	1.02	0.4	0.48	0.57	0.81	0.99	**1.27**	1.8	3.12
	5B NF03 . 065	**1/8"-1/4"**	1.09	0.48	0.57	0.68	0.97	1.18	**1.53**	2.16	3.74
	5B NF04 . 065	**1/8"-1/4"**	1.32	0.64	0.76	0.91	1.29	1.58	**2.04**	2.88	4.99
	5B NF05 . 065	**1/8"-1/4"**	1.45	0.81	0.95	1.14	1.61	1.97	**2.55**	3.6	6.24
	5B NF06 . 065	**1/8"-1/4"**	1.57	0.97	1.14	1.37	1.93	2.37	**3.06**	4.33	7.49
	5B NF08 . 065	**1/8"-1/4"**	1.83	1.28	1.52	1.82	2.57	3.15	**4.06**	5.74	9.95
	5B NF10 . 065	**1/8"-1/4"-3/8"**	2.03	1.61	1.91	2.28	3.22	3.95	**5.1**	7.21	12.5
	5B NF15 . 065	**1/8"-1/4"-3/8"**	2.38	2.42	2.86	3.42	4.83	5.92	**7.64**	10.8	18.7
	5B NF20 . 065	**1/8"-1/4"-3/8"**	2.78	3.22	3.81	4.56	6.45	7.89	**10.2**	14.4	25
	5B NF30 . 065	**1/8"-1/4"-3/8"**	3.57	4.83	5.72	6.84	9.67	11.8	**15.3**	21.6	37.4
	5B NF40 . 065	**1/8"-1/4"-3/8"**	3.97	6.45	7.63	9.12	12.9	15.8	**20.4**	28.8	49.9
	5B NF50 . 065	**1/4"-3/8"**	4.37	8.06	9.53	11.4	16.1	19.7	**25.5**	36	62.4
	5B NF60 . 065	**1/4"-3/8"-1/2"**	4.76	9.67	11.4	13.7	19.3	23.7	**30.6**	43.2	74.9
	5B NF70 . 065	**1/4"-3/8"-1/2"**	5.16	11.3	13.3	16	22.6	27.6	**35.7**	50.4	87.4
	5B NF80 . 065	**3/8"-1/2"**	5.56	12.9	15.3	18.2	25.8	31.6	**40.8**	57.7	99.9
	5B NF90 . 065	**3/8"-1/2"**	5.95	14.5	17.2	20.5	29	35.5	**45.9**	64.9	112
	5B NF100 . 065	**3/8"-1/2"**	6.35	16.1	19.1	22.8	32.2	39.5	**51**	72.1	125
	5B NF120 . 065	**3/8"-1/2"**	6.75	19.3	22.9	27.3	38.7	47.4	**61.1**	86.5	150
	5B NF150 . 065	**1/2"**	7.54	24.2	28.6	34.2	48.3	59.2	**76.4**	108	187
	5B NF200 . 065	**1/2"**	8.73	32.2	38.1	45.6	64.5	78.9	**102**	144	250
	5B NF300 . 065	**3/4"**	10.7	48.3	57.2	68.4	96.7	118	**153**	216	374
	5B NF400 . 065	**3/4"-1"**	12.7	64.5	76.3	91.2	129	158	**204**	288	499
	5B NF750 . 065	**1"**	17.5	121	143	171	242	296	**382**	540	936
	5B NF800 . 065	**1 1/4"**	18.3	129	153	182	258	316	**408**	577	999
	5B NF1150 . 065	**1 1/4"**	21.8	185	219	262	371	454	**586**	829	1440
	5B NF1500 . 065	**1 1/2"**	24.6	242	286	342	483	592	**764**	1080	1870
	5B NF2250 . 065	**2"**	30.2	362	429	513	725	890	**1150**	1620	2810

Order No.: CODE . CONNETION . MATERIAL

Example: 5B NF 30 . 030 . 014T . 3 Type 5B NF with mentioned Q(lpm)@P(bar), Spray angle: 30˚, 1/4" BSPT, S.S.316

SPADFLOW
SPRAYING SYSTEMS AND NOZZLES

Flat-Fan Spray Nozzles
Spadflow Series **5B NF**

Webpage + STP

5B NF

Spray angle (α)	Code	Connection** [inch]	A Ø [mm]	Flow rate [l/min] P [bar] 0.5	0.7	1.0 K factor	2.0	3.0	5.0	10	30
80˚	5B NF01 . 080	1/8"-1/4"	0.66	0.16	0.19	0.23	0.32	0.39	**0.51**	0.72	1.25
	5B NF015 . 080	1/8"-1/4"	0.79	0.24	0.29	0.34	0.48	0.59	**0.76**	1.08	1.87
	5B NF02 . 080	1/8"-1/4"	0.91	0.32	0.38	0.46	0.64	0.79	**1.02**	1.44	2.49
	5B NF025 . 080	1/8"-1/4"	1.02	0.4	0.48	0.57	0.81	0.99	**1.27**	1.8	3.12
	5B NF03 . 080	1/8"-1/4"	1.09	0.48	0.57	0.68	0.97	1.18	**1.53**	2.16	3.74
	5B NF04 . 080	1/8"-1/4"	1.32	0.64	0.76	0.91	1.29	1.58	**2.04**	2.88	4.99
	5B NF05 . 080	1/8"-1/4"	1.45	0.81	0.95	1.14	1.61	1.97	**2.55**	3.6	6.24
	5B NF06 . 080	1/8"-1/4"	1.57	0.97	1.14	1.37	1.93	2.37	**3.06**	4.33	7.49
	5B NF08 . 080	1/8"-1/4"	1.83	1.28	1.52	1.82	2.57	3.15	**4.06**	5.74	9.95
	5B NF10 . 080	1/8"-1/4"-3/8"	2.03	1.61	1.91	2.28	3.22	3.95	**5.1**	7.21	12.5
	5B NF15 . 080	1/8"-1/4"-3/8"	2.38	2.42	2.86	3.42	4.83	5.92	**7.64**	10.8	18.7
	5B NF20 . 080	1/8"-1/4"-3/8"	2.78	3.22	3.81	4.56	6.45	7.89	**10.2**	14.4	25
	5B NF30 . 080	1/8"-1/4"-3/8"	3.57	4.83	5.72	6.84	9.67	11.8	**15.3**	21.6	37.4
	5B NF40 . 080	1/8"-1/4"-3/8"	3.97	6.45	7.63	9.12	12.9	15.8	**20.4**	28.8	49.9
	5B NF50 . 080	1/4"-3/8"	4.37	8.06	9.53	11.4	16.1	19.7	**25.5**	36	62.4
	5B NF60 . 080	1/4"-3/8"-1/2"	4.76	9.67	11.4	13.7	19.3	23.7	**30.6**	43.2	74.9
	5B NF70 . 080	1/4"-3/8"-1/2"	5.16	11.3	13.3	16	22.6	27.6	**35.7**	50.4	87.4
	5B NF80 . 080	3/8"-1/2"	5.56	12.9	15.3	18.2	25.8	31.6	**40.8**	57.7	99.9
	5B NF90 . 080	3/8"-1/2"	5.95	14.5	17.2	20.5	29	35.5	**45.9**	64.9	112
	5B NF100 . 080	3/8"-1/2"	6.35	16.1	19.1	22.8	32.2	39.5	**51**	72.1	125
	5B NF120 . 080	3/8"-1/2"	6.75	19.3	22.9	27.3	38.7	47.4	**61.1**	86.5	150
	5B NF150 . 080	1/2"	7.54	24.2	28.6	34.2	48.3	59.2	**76.4**	108	187
	5B NF200 . 080	1/2"	8.73	32.2	38.1	45.6	64.5	78.9	**102**	144	250
	5B NF300 . 080	3/4"	10.7	48.3	57.2	68.4	96.7	118	**153**	216	374
	5B NF400 . 080	3/4"-1"	12.7	64.5	76.3	91.2	129	158	**204**	288	499
	5B NF750 . 080	1"	17.5	121	143	171	242	296	**382**	540	936
	5B NF800 . 080	1 1/4"	18.3	129	153	182	258	316	**408**	577	999
	5B NF1150 . 080	1 1/4"	21.8	185	219	262	371	454	**586**	829	1440
	5B NF1500 . 080	1 1/2"	24.6	242	286	342	483	592	**764**	1080	1870
	5B NF2250 . 080	2"	30.2	362	429	513	725	890	**1150**	1620	2810
90˚	5B NF01 . 090	1/8"-1/4"	0.66	0.16	0.19	0.23	0.32	0.39	**0.51**	0.72	1.25
	5B NF015 . 090	1/8"-1/4"	0.79	0.24	0.29	0.34	0.48	0.59	**0.76**	1.08	1.87
	5B NF02 . 090	1/8"-1/4"	0.91	0.32	0.38	0.46	0.64	0.79	**1.02**	1.44	2.49
	5B NF025 . 090	1/8"-1/4"	1.02	0.4	0.48	0.57	0.81	0.99	**1.27**	1.8	3.12
	5B NF03 . 090	1/8"-1/4"	1.09	0.48	0.57	0.68	0.97	1.18	**1.53**	2.16	3.74
	5B NF04 . 090	1/8"-1/4"	1.32	0.64	0.76	0.91	1.29	1.58	**2.04**	2.88	4.99
	5B NF05 . 090	1/8"-1/4"	1.45	0.81	0.95	1.14	1.61	1.97	**2.55**	3.6	6.24
	5B NF06 . 090	1/8"-1/4"	1.57	0.97	1.14	1.37	1.93	2.37	**3.06**	4.33	7.49
	5B NF08 . 090	1/8"-1/4"	1.83	1.28	1.52	1.82	2.57	3.15	**4.06**	5.74	9.95
	5B NF10 . 090	1/8"-1/4"-3/8"	2.03	1.61	1.91	2.28	3.22	3.95	**5.1**	7.21	12.5
	5B NF15 . 090	1/8"-1/4"-3/8"	2.38	2.42	2.86	3.42	4.83	5.92	**7.64**	10.8	18.7
	5B NF20 . 090	1/8"-1/4"-3/8"	2.78	3.22	3.81	4.56	6.45	7.89	**10.2**	14.4	25
	5B NF30 . 090	1/8"-1/4"-3/8"	3.57	4.83	5.72	6.84	9.67	11.8	**15.3**	21.6	37.4
	5B NF40 . 090	1/8"-1/4"-3/8"	3.97	6.45	7.63	9.12	12.9	15.8	**20.4**	28.8	49.9
	5B NF50 . 090	1/4"-3/8"	4.37	8.06	9.53	11.4	16.1	19.7	**25.5**	36	62.4
	5B NF60 . 090	1/4"-3/8"-1/2"	4.76	9.67	11.4	13.7	19.3	23.7	**30.6**	43.2	74.9
	5B NF70 . 090	1/4"-3/8"-1/2"	5.16	11.3	13.3	16	22.6	27.6	**35.7**	50.4	87.4
	5B NF80 . 090	3/8"-1/2"	5.56	12.9	15.3	18.2	25.8	31.6	**40.8**	57.7	99.9
	5B NF90 . 090	3/8"-1/2"	5.95	14.5	17.2	20.5	29	35.5	**45.9**	64.9	112
	5B NF100 . 090	3/8"-1/2"	6.35	16.1	19.1	22.8	32.2	39.5	**51**	72.1	125
	5B NF120 . 090	3/8"-1/2"	6.75	19.3	22.9	27.3	38.7	47.4	**61.1**	86.5	150
	5B NF150 . 090	1/2"	7.54	24.2	28.6	34.2	48.3	59.2	**76.4**	108	187
	5B NF200 . 090	1/2"	8.73	32.2	38.1	45.6	64.5	78.9	**102**	144	250
	5B NF300 . 090	3/4"	10.7	48.3	57.2	68.4	96.7	118	**153**	216	374
	5B NF400 . 090	3/4"-1"	12.7	64.5	76.3	91.2	129	158	**204**	288	499
	5B NF750 . 090	1"	17.5	121	143	171	242	296	**382**	540	936
	5B NF800 . 090	1 1/4"	18.3	129	153	182	258	316	**408**	577	999
	5B NF1150 . 090	1 1/4"	21.8	185	219	262	371	454	**586**	829	1440
	5B NF1500 . 090	1 1/2"	24.6	242	286	342	483	592	**764**	1080	1870
	5B NF2250 . 090	2"	30.2	362	429	513	725	890	**1150**	1620	2810
110˚	5B NF01 . 110	1/8"-1/4"	0.66	0.16	0.19	0.23	0.32	0.39	**0.51**	0.72	1.25

Order No.: CODE . CONNETION . MATERIAL

Example: 5B NF 30 . 030 . 014T . 3 Type 5B NF with mentioned Q(lpm)@P(bar), Spray angle: 30˚, 1/4" BSPT, S.S.316

SPADFLOW
SPRAYING SYSTEMS AND NOZZLES

Flat-Fan Spray Nozzles
Spadflow Series **5B NF**

Webpage + STP

5B NF

Spray angle (α)	Code	Connection** [inch]	A Ø [mm]	Flow rate [l/min] P [bar] 0.5	0.7	1.0 K factor	2.0	3.0	5.0	10	30
110°	5B NF015 . 110	1/8"-1/4"	0.79	0.24	0.29	0.34	0.48	0.59	**0.76**	1.08	1.87
	5B NF02 . 110	1/8"-1/4"	0.91	0.32	0.38	0.46	0.64	0.79	**1.02**	1.44	2.49
	5B NF025 . 110	1/8"-1/4"	1.02	0.4	0.48	0.57	0.81	0.99	**1.27**	1.8	3.12
	5B NF03 . 110	1/8"-1/4"	1.09	0.48	0.57	0.68	0.97	1.18	**1.53**	2.16	3.74
	5B NF04 . 110	1/8"-1/4"	1.32	0.64	0.76	0.91	1.29	1.58	**2.04**	2.88	4.99
	5B NF05 . 110	1/8"-1/4"	1.45	0.81	0.95	1.14	1.61	1.97	**2.55**	3.6	6.24
	5B NF06 . 110	1/8"-1/4"	1.57	0.97	1.14	1.37	1.93	2.37	**3.06**	4.33	7.49
	5B NF08 . 110	1/8"-1/4"	1.83	1.28	1.52	1.82	2.57	3.15	**4.06**	5.74	9.95
	5B NF10 . 110	1/8"-1/4"-3/8"	2.03	1.61	1.91	2.28	3.22	3.95	**5.1**	7.21	12.5
	5B NF15 . 110	1/8"-1/4"-3/8"	2.38	2.42	2.86	3.42	4.83	5.92	**7.64**	10.8	18.7
	5B NF20 . 110	1/8"-1/4"-3/8"	2.78	3.22	3.81	4.56	6.45	7.89	**10.2**	14.4	25
	5B NF30 . 110	1/8"-1/4"-3/8"	3.57	4.83	5.72	6.84	9.67	11.8	**15.3**	21.6	37.4
	5B NF40 . 110	1/8"-1/4"-3/8"	3.97	6.45	7.63	9.12	12.9	15.8	**20.4**	28.8	49.9
	5B NF50 . 110	1/4"-3/8"	4.37	8.06	9.53	11.4	16.1	19.7	**25.5**	36	62.4
	5B NF60 . 110	1/4"-3/8"-1/2"	4.76	9.67	11.4	13.7	19.3	23.7	**30.6**	43.2	74.9
	5B NF70 . 110	1/4"-3/8"-1/2"	5.16	11.3	13.3	16	22.6	27.6	**35.7**	50.4	87.4
	5B NF80 . 110	3/8"-1/2"	5.56	12.9	15.3	18.2	25.8	31.6	**40.8**	57.7	99.9
	5B NF90 . 110	3/8"-1/2"	5.95	14.5	17.2	20.5	29	35.5	**45.9**	64.9	112
	5B NF100 . 110	3/8"-1/2"	6.35	16.1	19.1	22.8	32.2	39.5	**51**	72.1	125
	5B NF120 . 110	3/8"-1/2"	6.75	19.3	22.9	27.3	38.7	47.4	**61.1**	86.5	150
	5B NF150 . 110	1/2"	7.54	24.2	28.6	34.2	48.3	59.2	**76.4**	108	187
	5B NF200 . 110	1/2"	8.73	32.2	38.1	45.6	64.5	78.9	**102**	144	250
	5B NF300 . 110	3/4"	10.7	48.3	57.2	68.4	96.7	118	**153**	216	374
	5B NF400 . 110	3/4"-1"	12.7	64.5	76.3	91.2	129	158	**204**	288	499
	5B NF750 . 110	1"	17.5	121	143	171	242	296	**382**	540	936
	5B NF800 . 110	1 1/4"	18.3	129	153	182	258	316	**408**	577	999
	5B NF1150 . 110	1 1/4"	21.8	185	219	262	371	454	**586**	829	1440
	5B NF1500 . 110	1 1/2"	24.6	242	286	342	483	592	**764**	1080	1870
	5B NF2250 . 110	2"	30.2	362	429	513	725	890	**1150**	1620	2810
120°	5B NF01 . 120	1/8"-1/4"	0.66	0.16	0.19	0.23	0.32	0.39	**0.51**	0.72	1.25
	5B NF015 . 120	1/8"-1/4"	0.79	0.24	0.29	0.34	0.48	0.59	**0.76**	1.08	1.87
	5B NF02 . 120	1/8"-1/4"	0.91	0.32	0.38	0.46	0.64	0.79	**1.02**	1.44	2.49
	5B NF025 . 120	1/8"-1/4"	1.02	0.4	0.48	0.57	0.81	0.99	**1.27**	1.8	3.12
	5B NF03 . 120	1/8"-1/4"	1.09	0.48	0.57	0.68	0.97	1.18	**1.53**	2.16	3.74
	5B NF04 . 120	1/8"-1/4"	1.32	0.64	0.76	0.91	1.29	1.58	**2.04**	2.88	4.99
	5B NF05 . 120	1/8"-1/4"	1.45	0.81	0.95	1.14	1.61	1.97	**2.55**	3.6	6.24
	5B NF06 . 120	1/8"-1/4"	1.57	0.97	1.14	1.37	1.93	2.37	**3.06**	4.33	7.49
	5B NF08 . 120	1/8"-1/4"	1.83	1.28	1.52	1.82	2.57	3.15	**4.06**	5.74	9.95
	5B NF10 . 120	1/8"-1/4"-3/8"	2.03	1.61	1.91	2.28	3.22	3.95	**5.1**	7.21	12.5
	5B NF15 . 120	1/8"-1/4"-3/8"	2.38	2.42	2.86	3.42	4.83	5.92	**7.64**	10.8	18.7
	5B NF20 . 120	1/8"-1/4"-3/8"	2.78	3.22	3.81	4.56	6.45	7.89	**10.2**	14.4	25
	5B NF30 . 120	1/8"-1/4"-3/8"	3.57	4.83	5.72	6.84	9.67	11.8	**15.3**	21.6	37.4
	5B NF40 . 120	1/8"-1/4"-3/8"	3.97	6.45	7.63	9.12	12.9	15.8	**20.4**	28.8	49.9
	5B NF50 . 120	1/4"-3/8"	4.37	8.06	9.53	11.4	16.1	19.7	**25.5**	36	62.4
	5B NF60 . 120	1/4"-3/8"-1/2"	4.76	9.67	11.4	13.7	19.3	23.7	**30.6**	43.2	74.9
	5B NF70 . 120	1/4"-3/8"-1/2"	5.16	11.3	13.3	16	22.6	27.6	**35.7**	50.4	87.4
	5B NF80 . 120	3/8"-1/2"	5.56	12.9	15.3	18.2	25.8	31.6	**40.8**	57.7	99.9
	5B NF90 . 120	3/8"-1/2"	5.95	14.5	17.2	20.5	29	35.5	**45.9**	64.9	112
	5B NF100 . 120	3/8"-1/2"	6.35	16.1	19.1	22.8	32.2	39.5	**51**	72.1	125
	5B NF120 . 120	3/8"-1/2"	6.75	19.3	22.9	27.3	38.7	47.4	**61.1**	86.5	150
	5B NF150 . 120	3/4"	7.54	24.2	28.6	34.2	48.3	59.2	**76.4**	108	187
	5B NF200 . 120	3/4"	8.73	32.2	38.1	45.6	64.5	78.9	**102**	144	250
	5B NF300 . 120	3/4"	10.7	48.3	57.2	68.4	96.7	118	**153**	216	374
	5B NF400 . 120	3/4"-1"	12.7	64.5	76.3	91.2	129	158	**204**	288	499
	5B NF750 . 120	1"	17.5	121	143	171	242	296	**382**	540	936
	5B NF800 . 120	1 1/4"	18.3	129	153	182	258	316	**408**	577	999
	5B NF1150 . 120	1 1/4"	21.8	185	219	262	371	454	**586**	829	1440
	5B NF1500 . 120	1 1/2"	24.6	242	286	342	483	592	**764**	1080	1870
	5B NF2250 . 120	2"	30.2	362	429	513	725	890	**1150**	1620	2810

** Different connection sizes are available upon request
A = equivalent bore diameter

Order No.: CODE . CONNETION . MATERIAL

Example: 5B NF 30 . 030 . 014T . 3 Type 5B NF with mentioned Q(lpm)@P(bar), Spray angle: 30˚, 1/4" BSPT, S.S.316

SPADFLOW
SPRAYING SYSTEMS AND NOZZLES

Flat-Fan Spray Nozzles
Spadflow Series **5L 602**

Webpage + STP

5L 602

High Pressure Nozzle

Applications:

- High pressure cleaning

Properties:

- Housing: Stainless steel 303
- Insert: Hardened stainless steel 420F
- Extremely narrow spray depth
- Sharp, uniform flat fan spray

5L 602

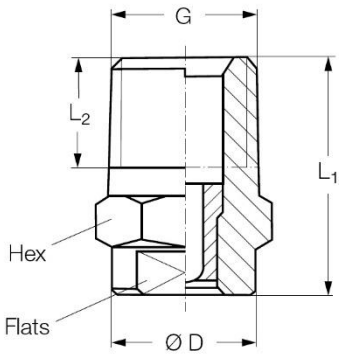

Size	Conn. code			Dimensions [mm]					Weight
	BSPT	BSPP	NPT	L_1	L_2	D	Hex	Flats	
1/4"	014T	014P	014N	22.0	10.0	13.0	14	10	18 g

Material*	Code
Brass	1
S.S.304	2
S.S.316	3

* Different materials are available upon request

α	Spray coverage @ 250 mm
20°	85
30°	125
45°	170
60°	290

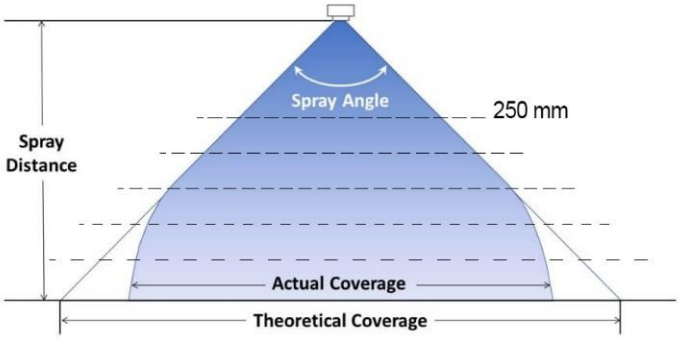

Spray angle (α)	Code	Connection** [inch]	General code	A Ø [mm]	Flow rate [l/min] P [bar] 40	60	80	100	120	150	200
20°	**5L 602 36 . 020**	**1/4"**	**2002**	1	2.88	3.53	**4.08**	4.56	5	5.58	6.45
	5L 602 37 . 020	**1/4"**	**20021**	1.02	3.03	3.71	**4.28**	4.79	5.25	5.87	6.77
	5L 602 38 . 020	**1/4"**	**20025**	1.1	3.6	4.42	**5.1**	5.7	6.24	6.98	8.06
	5L 602 39 . 020	**1/4"**	**20028**	1.16	4.04	4.94	**5.71**	6.38	6.99	7.81	9.02
	5L 602 40 . 020	**1/4"**	**2003**	1.18	4.32	5.29	**6.11**	6.83	7.48	8.37	9.66
	5L 602 41 . 020	**1/4"**	**20034**	1.3	4.9	6	**6.93**	7.75	8.49	9.49	10.96
	5L 602 44 . 020	**1/4"**	**20038**	1.33	5.48	6.72	**7.75**	8.67	9.5	10.62	12.26
	5L 602 45 . 020	**1/4"**	**2004**	1.35	5.77	7.06	**8.16**	9.12	9.99	11.17	12.9
	5L 602 46 . 020	**1/4"**	**20043**	1.38	6.2	7.59	**8.77**	9.8	10.74	12	13.86
	5L 602 47 . 020	**1/4"**	**20045**	1.4	6.49	7.95	**9.18**	10.26	11.24	12.57	14.51
	5L 602 48 . 020	**1/4"**	**2005**	1.55	7.21	8.83	**10.2**	11.4	12.49	13.96	16.12
	5L 602 50 . 020	**1/4"**	**20055**	1.6	7.93	9.71	**11.22**	12.54	13.74	15.36	17.73
	5L 602 52 . 020	**1/4"**	**2006**	1.72	8.65	10.6	**12.24**	13.68	14.99	16.75	19.35
	5L 602 53 . 020	**1/4"**	**20065**	1.75	9.37	11.48	**13.26**	14.82	16.23	18.15	20.96

038– R01 – C00

Order No.: CODE . CONNETION . MATERIAL

Example: 5L 602 36 . 020 . 014T . 3 Type 5L 602 with mentioned Q(lpm)@P(bar), Spray angle: 20˚, 1/4" BSPT, S.S.316

SPADFLOW
SPRAYING SYSTEMS AND NOZZLES

Flat-Fan Spray Nozzles
Spadflow Series **5L 602**

Webpage + STP

5L 602

Spray angle (α)	Code	Connection** [inch]	General code	A Ø [mm]	Flow rate [l/min] P [bar] 40	60	80	100	120	150	200
	5L 602 54 . 020	**1/4"**	**2007**	1.8	10.09	12.36	**14.28**	15.96	17.48	19.55	22.57
	5L 602 55 . 020	**1/4"**	**20075**	1.9	10.81	13.25	**15.29**	17.1	18.73	20.94	24.18
	5L 602 57 . 020	**1/4"**	**2008**	2.05	11.54	14.13	**16.31**	18.24	19.98	22.34	25.8
	5L 602 58 . 020	**1/4"**	**20087**	2.06	12.54	15.36	**17.74**	19.83	21.72	24.29	28.04
	5L 602 59 . 020	**1/4"**	**2009**	2.1	12.98	15.89	**18.35**	20.52	22.48	25.13	29.02
	5L 602 60 . 020	**1/4"**	**2010**	2.3	14.41	17.65	**20.38**	22.79	24.97	27.91	32.23
	5L 602 62 . 020	**1/4"**	**2011**	2.4	15.86	19.42	**22.42**	25.07	27.46	30.7	35.45
	5L 602 64 . 020	**1/4"**	**20125**	2.5	18.02	22.07	**25.48**	28.49	31.21	34.89	40.29
	5L 602 65 . 020	**1/4"**	**20131**	2.55	18.89	23.13	**26.71**	29.86	32.71	36.57	42.23
	5L 602 66 . 020	**1/4"**	**20139**	2.65	20.04	24.54	**28.34**	31.68	34.7	38.8	44.8
	5L 602 67 . 020	**1/4"**	**2015**	2.7	21.62	26.48	**30.58**	34.19	37.45	41.87	48.35
	5L 602 70 . 020	**1/4"**	**20175**	3	25.23	30.9	**35.68**	39.89	43.7	48.86	56.41
	5L 602 36 . 030	**1/4"**	**3002**	1	2.88	3.53	**4.08**	4.56	5	5.58	6.45
	5L 602 37 . 030	**1/4"**	**30021**	1.02	3.03	3.71	**4.28**	4.79	5.25	5.87	6.77
	5L 602 38 . 030	**1/4"**	**30025**	1.1	3.6	4.42	**5.1**	5.7	6.24	6.98	8.06
	5L 602 39 . 030	**1/4"**	**30028**	1.16	4.04	4.94	**5.71**	6.38	6.99	7.81	9.02
	5L 602 40 . 030	**1/4"**	**3003**	1.18	4.32	5.29	**6.11**	6.83	7.48	8.37	9.66
	5L 602 41 . 030	**1/4"**	**30034**	1.3	4.9	6	**6.93**	7.75	8.49	9.49	10.96
	5L 602 44 . 030	**1/4"**	**30038**	1.33	5.48	6.72	**7.75**	8.67	9.5	10.62	12.26
	5L 602 45 . 030	**1/4"**	**3004**	1.35	5.77	7.06	**8.16**	9.12	9.99	11.17	12.9
	5L 602 46 . 030	**1/4"**	**30043**	1.38	6.2	7.59	**8.77**	9.8	10.74	12	13.86
	5L 602 47 . 030	**1/4"**	**30045**	1.4	6.49	7.95	**9.18**	10.26	11.24	12.57	14.51
	5L 602 48 . 030	**1/4"**	**3005**	1.55	7.21	8.83	**10.2**	11.4	12.49	13.96	16.12
	5L 602 50 . 030	**1/4"**	**30055**	1.6	7.93	9.71	**11.22**	12.54	13.74	15.36	17.73
30°	**5L 602 52 . 030**	**1/4"**	**3006**	1.72	8.65	10.6	**12.24**	13.68	14.99	16.75	19.35
	5L 602 53 . 030	**1/4"**	**30065**	1.75	9.37	11.48	**13.26**	14.82	16.23	18.15	20.96
	5L 602 54 . 030	**1/4"**	**3007**	1.8	10.09	12.36	**14.28**	15.96	17.48	19.55	22.57
	5L 602 55 . 030	**1/4"**	**30075**	1.9	10.81	13.25	**15.29**	17.1	18.73	20.94	24.18
	5L 602 57 . 030	**1/4"**	**3008**	2.05	11.54	14.13	**16.31**	18.24	19.98	22.34	25.8
	5L 602 58 . 030	**1/4"**	**30087**	2.06	12.54	15.36	**17.74**	19.83	21.72	24.29	28.04
	5L 602 59 . 030	**1/4"**	**3009**	2.1	12.98	15.89	**18.35**	20.52	22.48	25.13	29.02
	5L 602 60 . 030	**1/4"**	**3010**	2.3	14.41	17.65	**20.38**	22.79	24.97	27.91	32.23
	5L 602 62 . 030	**1/4"**	**3011**	2.4	15.86	19.42	**22.42**	25.07	27.46	30.7	35.45
	5L 602 64 . 030	**1/4"**	**30125**	2.5	18.02	22.07	**25.48**	28.49	31.21	34.89	40.29
	5L 602 65 . 030	**1/4"**	**30131**	2.55	18.89	23.13	**26.71**	29.86	32.71	36.57	42.23
	5L 602 66 . 030	**1/4"**	**30139**	2.65	20.04	24.54	**28.34**	31.68	34.7	38.8	44.8
	5L 602 67 . 030	**1/4"**	**3015**	2.7	21.62	26.48	**30.58**	34.19	37.45	41.87	48.35
	5L 602 70 . 030	**1/4"**	**30175**	3	25.23	30.9	**35.68**	39.89	43.7	48.86	56.41
	5L 602 36 . 040	**1/4"**	**4002**	1	2.88	3.53	**4.08**	4.56	5	5.58	6.45
	5L 602 37 . 040	**1/4"**	**40021**	1.02	3.03	3.71	**4.28**	4.79	5.25	5.87	6.77
	5L 602 38 . 040	**1/4"**	**40025**	1.1	3.6	4.42	**5.1**	5.7	6.24	6.98	8.06
	5L 602 39 . 040	**1/4"**	**40028**	1.16	4.04	4.94	**5.71**	6.38	6.99	7.81	9.02
	5L 602 40 . 040	**1/4"**	**4003**	1.18	4.32	5.29	**6.11**	6.83	7.48	8.37	9.66
	5L 602 41 . 040	**1/4"**	**40034**	1.3	4.9	6	**6.93**	7.75	8.49	9.49	10.96
	5L 602 44 . 040	**1/4"**	**40038**	1.33	5.48	6.72	**7.75**	8.67	9.5	10.62	12.26
	5L 602 45 . 040	**1/4"**	**4004**	1.35	5.77	7.06	**8.16**	9.12	9.99	11.17	12.9
	5L 602 47 . 040	**1/4"**	**40045**	1.4	6.49	7.95	**9.18**	10.26	11.24	12.57	14.51
	5L 602 48 . 040	**1/4"**	**4005**	1.55	7.21	8.83	**10.2**	11.4	12.49	13.96	16.12
40°	**5L 602 50 . 040**	**1/4"**	**40055**	1.6	7.93	9.71	**11.22**	12.54	13.74	15.36	17.73
	5L 602 52 . 040	**1/4"**	**4006**	1.72	8.65	10.6	**12.24**	13.68	14.99	16.75	19.35
	5L 602 53 . 040	**1/4"**	**40065**	1.75	9.37	11.48	**13.26**	14.82	16.23	18.15	20.96
	5L 602 54 . 040	**1/4"**	**4007**	1.8	10.09	12.36	**14.28**	15.96	17.48	19.55	22.57
	5L 602 55 . 040	**1/4"**	**40075**	1.9	10.81	13.25	**15.29**	17.1	18.73	20.94	24.18
	5L 602 57 . 040	**1/4"**	**4008**	2.05	11.54	14.13	**16.31**	18.24	19.98	22.34	25.8
	5L 602 58 . 040	**1/4"**	**40087**	2.06	12.54	15.36	**17.74**	19.83	21.72	24.29	28.04
	5L 602 59 . 040	**1/4"**	**4009**	2.1	12.98	15.89	**18.35**	20.52	22.48	25.13	29.02
	5L 602 60 . 040	**1/4"**	**4010**	2.3	14.41	17.65	**20.38**	22.79	24.97	27.91	32.23
	5L 602 62 . 040	**1/4"**	**4011**	2.4	15.86	19.42	**22.42**	25.07	27.46	30.7	35.45
	5L 602 64 . 040	**1/4"**	**40125**	2.5	18.02	22.07	**25.48**	28.49	31.21	34.89	40.29

Order No.: CODE . CONNETION . MATERIAL

Example: 5L 602 36 . 020 . 014T . 3 Type 5L 602 with mentioned Q(lpm)@P(bar), Spray angle: 20˚, 1/4" BSPT, S.S.316

SPADFLOW
SPRAYING SYSTEMS AND NOZZLES

Flat-Fan Spray Nozzles
Spadflow Series **5L 602**

Webpage + STP

5L 602

Spray angle (α)	Code	Connection** [inch]	General code	A Ø [mm]	Flow rate [l/min] P [bar] 40	60	80	100	120	150	200
	5L 602 65 . 040	**1/4"**	**40131**	2.55	18.89	23.13	**26.71**	29.86	32.71	36.57	42.23
	5L 602 66 . 040	**1/4"**	**40139**	2.65	20.04	24.54	**28.34**	31.68	34.7	38.8	44.8
	5L 602 67 . 040	**1/4"**	**4015**	2.7	21.62	26.48	**30.58**	34.19	37.40	41.87	48.35
	5L 602 70 . 040	**1/4"**	**40175**	3	25.23	30.9	**35.68**	39.89	43.7	48.86	56.41
	5L 602 72 . 040	**1/4"**	**4020**	3.05	28.83	35.31	**40.78**	40.59	49.94	55.84	64.47
	5L 602 76 . 040	**1/4"**	**4025**	3.5	36.04	44.14	**50.97**	56.99	62.43	69.8	80.6
	5L 602 79 . 040	**1/4"**	**4030**	3.9	43.25	52.97	**61.16**	68.38	74.91	83.75	96.7
	5L 602 36 . 045	**1/4"**	**4502**	1	2.88	3.53	**4.08**	4.56	5	5.58	6.45
	5L 602 37 . 045	**1/4"**	**45021**	1.02	3.03	3.71	**4.28**	4.79	5.25	5.87	6.77
	5L 602 38 . 045	**1/4"**	**45025**	1.1	3.6	4.42	**5.1**	5.7	6.24	6.98	8.06
	5L 602 39 . 045	**1/4"**	**45028**	1.16	4.04	4.94	**5.71**	6.38	6.99	7.81	9.02
	5L 602 40 . 045	**1/4"**	**4503**	1.18	4.32	5.29	**6.11**	6.83	7.48	8.37	9.66
	5L 602 41 . 045	**1/4"**	**45034**	1.3	4.9	6	**6.93**	7.75	8.49	9.49	10.96
	5L 602 44 . 045	**1/4"**	**45038**	1.33	5.48	6.72	**7.75**	8.67	9.5	10.62	12.26
	5L 602 45 . 045	**1/4"**	**4504**	1.35	5.77	7.06	**8.16**	9.12	9.99	11.17	12.9
	5L 602 47 . 045	**1/4"**	**45045**	1.4	6.49	7.95	**9.18**	10.26	11.24	12.57	14.51
	5L 602 48 . 045	**1/4"**	**4505**	1.55	7.21	8.83	**10.2**	11.4	12.49	13.96	16.12
	5L 602 50 . 045	**1/4"**	**45055**	1.6	7.93	9.71	**11.22**	12.54	13.74	15.36	17.73
	5L 602 52 . 045	**1/4"**	**4506**	1.72	8.65	10.6	**12.24**	13.68	14.99	16.75	19.35
	5L 602 53 . 045	**1/4"**	**45065**	1.75	9.37	11.48	**13.26**	14.82	16.23	18.15	20.96
45°	**5L 602 54 . 045**	**1/4"**	**4507**	1.8	10.09	12.36	**14.28**	15.96	17.48	19.55	22.57
	5L 602 55 . 045	**1/4"**	**45075**	1.9	10.81	13.25	**15.29**	17.1	18.73	20.94	24.18
	5L 602 57 . 045	**1/4"**	**4508**	2.05	11.54	14.13	**16.31**	18.24	19.98	22.34	25.8
	5L 602 58 . 045	**1/4"**	**45087**	2.06	12.54	15.36	**17.74**	19.83	21.72	24.29	28.04
	5L 602 59 . 045	**1/4"**	**4509**	2.1	12.98	15.89	**18.35**	20.52	22.48	25.13	29.02
	5L 602 60 . 045	**1/4"**	**4510**	2.3	14.41	17.65	**20.38**	22.79	24.97	27.91	32.23
	5L 602 62 . 045	**1/4"**	**4511**	2.4	15.86	19.42	**22.42**	25.07	27.46	30.7	35.45
	5L 602 64 . 045	**1/4"**	**45125**	2.5	18.02	22.07	**25.48**	28.49	31.21	34.89	40.29
	5L 602 65 . 045	**1/4"**	**45131**	2.55	18.89	23.13	**26.71**	29.86	32.71	36.57	42.23
	5L 602 66 . 045	**1/4"**	**45139**	2.65	20.04	24.54	**28.34**	31.68	34.7	38.8	44.8
	5L 602 67 . 045	**1/4"**	**4515**	2.7	21.62	26.48	**30.58**	34.19	37.45	41.87	48.35
	5L 602 70 . 045	**1/4"**	**45175**	3	25.23	30.9	**35.68**	39.89	43.7	48.86	56.41
	5L 602 72 . 045	**1/4"**	**4520**	3.05	28.83	35.31	**40.78**	45.59	49.94	55.84	64.47
	5L 602 76 . 045	**1/4"**	**4525**	3.5	36.04	44.14	**50.97**	56.99	62.43	69.8	80.6
	5L 602 79 . 045	**1/4"**	**4530**	3.9	43.25	52.97	**61.16**	68.38	74.91	83.75	96.7
	5L 602 36 . 060	**1/4"**	**6002**	1	2.88	3.53	**4.08**	4.56	5	5.58	6.45
	5L 602 37 . 060	**1/4"**	**60021**	1.02	3.03	3.71	**4.28**	4.79	5.25	5.87	6.77
	5L 602 38 . 060	**1/4"**	**60025**	1.1	3.6	4.42	**5.1**	5.7	6.24	6.98	8.06
	5L 602 39 . 060	**1/4"**	**60028**	1.16	4.04	4.94	**5.71**	6.38	6.99	7.81	9.02
	5L 602 40 . 060	**1/4"**	**6003**	1.18	4.32	5.29	**6.11**	6.83	7.48	8.37	9.66
	5L 602 41 . 060	**1/4"**	**60034**	1.3	4.9	6	**6.93**	7.75	8.49	9.49	10.96
	5L 602 45 . 060	**1/4"**	**6004**	1.35	5.77	7.06	**8.16**	9.12	9.99	11.17	12.9
	5L 602 47 . 060	**1/4"**	**60045**	1.4	6.49	7.95	**9.18**	10.26	11.24	12.57	14.51
	5L 602 48 . 060	**1/4"**	**6005**	1.55	7.21	8.83	**10.2**	11.4	12.49	13.96	16.12
	5L 602 50 . 060	**1/4"**	**60055**	1.6	7.93	9.71	**11.22**	12.54	13.74	15.36	17.73
	5L 602 52 . 060	**1/4"**	**6006**	1.72	8.65	10.6	**12.24**	13.68	14.99	16.75	19.35
	5L 602 53 . 060	**1/4"**	**60065**	1.75	9.37	11.48	**13.26**	14.82	16.23	18.15	20.96
60˚	**5L 602 54 . 060**	**1/4"**	**6007**	1.8	10.09	12.36	**14.28**	15.96	17.48	19.55	22.57
	5L 602 55 . 060	**1/4"**	**60075**	1.9	10.81	13.25	**15.29**	17.1	18.73	20.94	24.18
	5L 602 57 . 060	**1/4"**	**6008**	2.05	11.54	14.13	**16.31**	18.24	19.98	22.34	25.8
	5L 602 58 . 060	**1/4"**	**60087**	2.06	12.54	15.36	**17.74**	19.83	21.72	24.29	28.04
	5L 602 59 . 060	**1/4"**	**6009**	2.1	12.98	15.89	**18.35**	20.52	22.48	25.13	29.02
	5L 602 60 . 060	**1/4"**	**6010**	2.3	14.41	17.65	**20.38**	22.79	24.97	27.91	32.23
	5L 602 62 . 060	**1/4"**	**6011**	2.4	15.86	19.42	**22.42**	25.07	27.46	30.7	35.45
	5L 602 64 . 060	**1/4"**	**60125**	2.5	18.02	22.07	**25.48**	28.49	31.21	34.89	40.29
	5L 602 65 . 060	**1/4"**	**60131**	2.55	18.89	23.13	**26.71**	29.86	32.71	36.57	42.23
	5L 602 66 . 060	**1/4"**	**60139**	2.65	20.04	24.54	**28.34**	31.68	34.7	38.8	44.8
	5L 602 67 . 060	**1/4"**	**6015**	2.7	21.62	26.48	**30.58**	34.19	37.45	41.87	48.35
	5L 602 70 . 060	**1/4"**	**60175**	3	25.23	30.9	**35.68**	39.89	43.7	48.86	56.41
	5L 602 72 . 060	**1/4"**	**6020**	3.05	28.83	35.31	**40.78**	45.59	49.94	55.84	64.47

Order No.: CODE . CONNETION . MATERIAL

Example: 5L 602 36 . 020 . 014T . 3 Type 5L 602 with mentioned Q(lpm)@P(bar), Spray angle: 20˚, 1/4" BSPT, S.S.316

SPADFLOW
SPRAYING SYSTEMS AND NOZZLES

Flat-Fan Spray Nozzles
Spadflow Series **5L 602**

Webpage + STP

5L 602

Spray angle (α)	Code	Connection** [inch]	General code	A Ø [mm]	Flow rate [l/min] P [bar] 40	60	80	100	120	150	200
	5L 602 76 . 060	**1/4"**	**6025**	3.5	36.04	44.14	**50.97**	56.99	62.43	69.8	80.6
80˚	**5L 602 36 .** 080	**1/4"**	80**02**	1	2.88	3.53	**4.08**	4.56	5	5.58	6.45
	5L 602 37 . 080	**1/4"**	**80021**	1.02	3.03	3.71	**4.28**	4.79	5.25	5.87	6.77
	5L 602 38 . 080	**1/4"**	**80025**	1.1	3.6	4.42	**5.1**	5.7	6.24	6.98	8.06
	5L 602 39 . 080	**1/4"**	**80028**	1.16	4.04	4.94	**5.71**	6.38	6.99	7.81	9.02
	5L 602 40 . 080	**1/4"**	**8003**	1.18	4.32	5.29	**6.11**	6.83	7.48	8.37	9.66
	5L 602 41 . 080	**1/4"**	**80034**	1.3	4.9	6	**6.93**	7.75	8.49	9.49	10.96
	5L 602 45 . 080	**1/4"**	**8004**	1.35	5.77	7.06	**8.16**	9.12	9.99	11.17	12.9
	5L 602 47 . 080	**1/4"**	**80045**	1.4	6.49	7.95	**9.18**	10.26	11.24	12.57	14.51
	5L 602 48 . 080	**1/4"**	**8005**	1.55	7.21	8.83	**10.2**	11.4	12.49	13.96	16.12
	5L 602 50 . 080	**1/4"**	**80055**	1.6	7.93	9.71	**11.22**	12.54	13.74	15.36	17.73
	5L 602 52 . 080	**1/4"**	**8006**	1.72	8.65	10.6	**12.24**	13.68	14.99	16.75	19.35
	5L 602 53 . 080	**1/4"**	**80065**	1.75	9.37	11.48	**13.26**	14.82	16.23	18.15	20.96
	5L 602 54 . 080	**1/4"**	**8007**	1.8	10.09	12.36	**14.28**	15.96	17.48	19.55	22.57
	5L 602 55 . 080	**1/4"**	**80075**	1.9	10.81	13.25	**15.29**	17.1	18.73	20.94	24.18
	5L 602 57 . 080	**1/4"**	**8008**	2.05	11.54	14.13	**16.31**	18.24	19.98	22.34	25.8
	5L 602 58 . 080	**1/4"**	**80087**	2.06	12.54	15.36	**17.74**	19.83	21.72	24.29	28.04
	5L 602 59 . 080	**1/4"**	**8009**	2.1	12.98	15.89	**18.35**	20.52	22.48	25.13	29.02
	5L 602 60 . 080	**1/4"**	**8010**	2.3	14.41	17.65	**20.38**	22.79	24.97	27.91	32.23
	5L 602 62 . 080	**1/4"**	**8011**	2.4	15.86	19.42	**22.42**	25.07	27.46	30.7	35.45
	5L 602 64 . 080	**1/4"**	**80125**	2.5	18.02	22.07	**25.48**	28.49	31.21	34.89	40.29
	5L 602 65 . 080	**1/4"**	**80131**	2.55	18.89	23.13	**26.71**	29.86	32.71	36.57	42.23
	5L 602 66 . 080	**1/4"**	**80139**	2.65	20.04	24.54	**28.34**	31.68	34.7	38.8	44.8
	5L 602 67 . 080	**1/4"**	**8015**	2.7	21.62	26.48	**30.58**	34.19	37.45	41.87	48.35
	5L 602 70 . 080	**1/4"**	**80175**	3	25.23	30.9	**35.68**	39.89	43.7	48.86	56.41
	5L 602 72 . 080	**1/4"**	**8020**	3.05	28.83	35.31	**40.78**	45.59	49.94	55.84	64.47
	5L 602 76 . 080	**1/4"**	**8025**	3.5	36.04	44.14	**50.97**	56.99	62.43	69.8	80.6

** Different connection sizes are available upon request
A = equivalent bore diameter

Order No.: CODE . CONNETION . MATERIAL

Example: 5L 602 36 . 020 . 014T . 3 Type 5L 602 with mentioned Q(lpm)@P(bar), Spray angle: 20˚, 1/4" BSPT, S.S.316

SPADFLOW
SPRAYING SYSTEMS AND NOZZLES

Flat-Fan Spray Nozzles
Spadflow Series **5L 608**

Webpage + STP

5L 608

High Pressure Nozzle

Applications:

- High pressure cleaning

Properties:

- Housing: Stainless steel 303
- Insert: Hardened stainless steel 420F
- Extremely narrow spray depth
- Sharp, uniform flat fan spray

5L 608

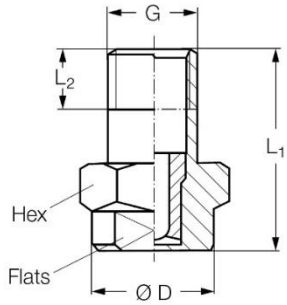

Size	Conn. code			Dimensions [mm]					Weight
	BSPT	BSPP	NPT	L_1	L_2	D	Hex	Flats	
1/8"	018	018	018	22.0	6.5	13.0	14	10	13 g

Material*	Code
Brass	1
S.S.304	2
S.S.316	3

* Different materials are available upon request

α	Spray coverage @ 250 mm
20°	85
30°	125
45°	170
60°	290

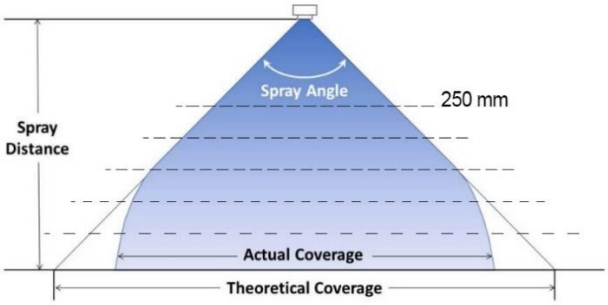

Spray angle (α)	Code	General code	Connection** [inch]	A Ø [mm]	Flow rate [l/min] P [bar] 40	60	80	100	120	150	200
20°	5L 608 36 . 020	2002	1/8"	1	2.88	3.53	4.08	4.56	5	5.58	6.45
	5L 608 37 . 020	20021	1/8"	1.02	3.03	3.71	4.28	4.79	5.25	5.87	6.77
	5L 608 38 . 020	20025	1/8"	1.1	3.6	4.42	5.1	5.7	6.24	6.98	8.06
	5L 608 39 . 020	20028	1/8"	1.16	4.04	4.94	5.71	6.38	6.99	7.81	9.02
	5L 608 40 . 020	2003	1/8"	1.18	4.32	5.29	6.11	6.83	7.48	8.37	9.66
	5L 608 41 . 020	20034	1/8"	1.3	4.9	6	6.93	7.75	8.49	9.49	10.96
	5L 608 44 . 020	20038	1/8"	1.33	5.48	6.72	7.75	8.67	9.5	10.62	12.26
	5L 608 45 . 020	2004	1/8"	1.35	5.77	7.06	8.16	9.12	9.99	11.17	12.9
	5L 608 46 . 020	20043	1/8"	1.38	6.2	7.59	8.77	9.8	10.74	12	13.86
	5L 608 47 . 020	20045	1/8"	1.4	6.49	7.95	9.18	10.26	11.24	12.57	14.51
	5L 608 48 . 020	2005	1/8"	1.55	7.21	8.83	10.2	11.4	12.49	13.96	16.12
	5L 608 50 . 020	20055	1/8"	1.6	7.93	9.71	11.22	12.54	13.74	15.36	17.73
	5L 608 52 . 020	2006	1/8"	1.72	8.65	10.6	12.24	13.68	14.99	16.75	19.35
	5L 608 53 . 020	20065	1/8"	1.75	9.37	11.48	13.26	14.82	16.23	18.15	20.96
	5L 608 54 . 020	2007	1/8"	1.8	10.09	12.36	14.28	15.96	17.48	19.55	22.57
	5L 608 55 . 020	20075	1/8"	1.9	10.81	13.25	15.29	17.1	18.73	20.94	24.18
	5L 608 57 . 020	2008	1/8"	2.05	11.54	14.13	16.31	18.24	19.98	22.34	25.8
	5L 608 58 . 020	20087	1/8"	2.06	12.54	15.36	17.74	19.83	21.72	24.29	28.04
	5L 608 59 . 020	2009	1/8"	2.1	12.98	15.89	18.35	20.52	22.48	25.13	29.02

038– R01 – C00

Order No.: CODE . CONNETION . MATERIAL

Example: 5L 608 36 . 020 . 018 . 3 Type 5L 608 with mentioned Q(lpm)@P(bar), Spray angle: 20˚, 1/8" BSPT, S.S.316

SPADFLOW
SPRAYING SYSTEMS AND NOZZLES

Flat-Fan Spray Nozzles
Spadflow Series **5L 608**

Webpage + STP

5L 608

Spray angle (α)	Code	General code	Connection** [inch]	A Ø [mm]	Flow rate [l/min] P [bar] 40	60	80	100	120	150	200
	5L 608 60 . 020	2010	1/8"	2.3	14.41	17.65	20.38	22.79	24.97	27.91	32.23
30°	5L 608 36 . 030	3002	1/8"	1	2.88	3.53	4.08	4.56	5	5.58	6.45
	5L 608 37 . 030	30021	1/8"	1.02	3.03	3.71	4.28	4.79	5.25	5.87	6.77
	5L 608 38 . 030	30025	1/8"	1.1	3.6	4.42	5.1	5.7	6.24	6.98	8.06
	5L 608 39 . 030	30028	1/8"	1.16	4.04	4.94	5.71	6.38	6.99	7.81	9.02
	5L 608 40 . 030	3003	1/8"	1.18	4.32	5.29	6.11	6.83	7.48	8.37	9.66
	5L 608 41 . 030	30034	1/8"	1.3	4.9	6	6.93	7.75	8.49	9.49	10.96
	5L 608 44 . 030	30038	1/8"	1.33	5.48	6.72	7.75	8.67	9.5	10.62	12.26
	5L 608 45 . 030	3004	1/8"	1.35	5.77	7.06	8.16	9.12	9.99	11.17	12.9
	5L 608 46 . 030	30043	1/8"	1.38	6.2	7.59	8.77	9.8	10.74	12	13.86
	5L 608 47 . 030	30045	1/8"	1.4	6.49	7.95	9.18	10.26	11.24	12.57	14.51
	5L 608 48 . 030	3005	1/8"	1.55	7.21	8.83	10.2	11.4	12.49	13.96	16.12
	5L 608 50 . 030	30055	1/8"	1.6	7.93	9.71	11.22	12.54	13.74	15.36	17.73
	5L 608 52 . 030	3006	1/8"	1.72	8.65	10.6	12.24	13.68	14.99	16.75	19.35
	5L 608 53 . 030	30065	1/8"	1.75	9.37	11.48	13.26	14.82	16.23	18.15	20.96
	5L 608 54 . 030	3007	1/8"	1.8	10.09	12.36	14.28	15.96	17.48	19.55	22.57
	5L 608 55 . 030	30075	1/8"	1.9	10.81	13.25	15.29	17.1	18.73	20.94	24.18
	5L 608 57 . 030	3008	1/8"	2.05	11.54	14.13	16.31	18.24	19.98	22.34	25.8
	5L 608 58 . 030	30087	1/8"	2.06	12.54	15.36	17.74	19.83	21.72	24.29	28.04
	5L 608 59 . 030	3009	1/8"	2.1	12.98	15.89	18.35	20.52	22.48	25.13	29.02
	5L 608 60 . 030	3010	1/8"	2.3	14.41	17.65	20.38	22.79	24.97	27.91	32.23
40°	5L 608 36 . 040	40021	1/8"	1	2.88	3.53	4.08	4.56	5	5.58	6.45
	5L 608 37 . 040	40025	1/8"	1.02	3.03	3.71	4.28	4.79	5.25	5.87	6.77
	5L 608 38 . 040	40028	1/8"	1.1	3.6	4.42	5.1	5.7	6.24	6.98	8.06
	5L 608 39 . 040	4003	1/8"	1.16	4.04	4.94	5.71	6.38	6.99	7.81	9.02
	5L 608 40 . 040	40034	1/8"	1.18	4.32	5.29	6.11	6.83	7.48	8.37	9.66
	5L 608 41 . 040	40038	1/8"	1.3	4.9	6	6.93	7.75	8.49	9.49	10.96
	5L 608 44 . 040	4004	1/8"	1.33	5.48	6.72	7.75	8.67	9.5	10.62	12.26
	5L 608 45 . 040	40040	1/8"	1.35	5.77	7.06	8.16	9.12	9.99	11.17	12.9
	5L 608 47 . 040	4005	1/8"	1.4	6.49	7.95	9.18	10.26	11.24	12.57	14.51
	5L 608 48 . 040	40055	1/8"	1.55	7.21	8.83	10.2	11.4	12.49	13.96	16.12
	5L 608 50 . 040	4006	1/8"	1.6	7.93	9.71	11.22	12.54	13.74	15.36	17.73
	5L 608 52 . 040	40065	1/8"	1.72	8.65	10.6	12.24	13.68	14.99	16.75	19.35
	5L 608 53 . 040	4007	1/8"	1.75	9.37	11.48	13.26	14.82	16.23	18.15	20.96
	5L 608 54 . 040	40075	1/8"	1.8	10.09	12.36	14.28	15.96	17.48	19.55	22.57
	5L 608 55 . 040	4008	1/8"	1.9	10.81	13.25	15.29	17.1	18.73	20.94	24.18
	5L 608 57 . 040	40087	1/8"	2.05	11.54	14.13	16.31	18.24	19.98	22.34	25.8
	5L 608 58 . 040	4009	1/8"	2.06	12.54	15.36	17.74	19.83	21.72	24.29	28.04
	5L 608 59 . 040	4010	1/8"	2.1	12.98	15.89	18.35	20.52	22.48	25.13	29.02
	5L 608 60 . 040	40021	1/8"	2.3	14.41	17.65	20.38	22.79	24.97	27.91	32.23
45°	5L 608 36 . 045	4502	1/8"	1	2.88	3.53	4.08	4.56	5	5.58	6.45
	5L 608 37 . 045	45021	1/8"	1.02	3.03	3.71	4.28	4.79	5.25	5.87	6.77
	5L 608 38 . 045	45025	1/8"	1.1	3.6	4.42	5.1	5.7	6.24	6.98	8.06
	5L 608 39 . 045	45028	1/8"	1.16	4.04	4.94	5.71	6.38	6.99	7.81	9.02
	5L 608 40 . 045	4503	1/8"	1.18	4.32	5.29	6.11	6.83	7.48	8.37	9.66
	5L 608 41 . 045	45034	1/8"	1.3	4.9	6	6.93	7.75	8.49	9.49	10.96
	5L 608 44 . 045	45038	1/8"	1.33	5.48	6.72	7.75	8.67	9.5	10.62	12.26
	5L 608 45 . 045	4504	1/8"	1.35	5.77	7.06	8.16	9.12	9.99	11.17	12.9
	5L 608 47 . 045	45045	1/8"	1.4	6.49	7.95	9.18	10.26	11.24	12.57	14.51
	5L 608 48 . 045	4505	1/8"	1.55	7.21	8.83	10.2	11.4	12.49	13.96	16.12
	5L 608 50 . 045	45055	1/8"	1.6	7.93	9.71	11.22	12.54	13.74	15.36	17.73
	5L 608 52 . 045	4506	1/8"	1.72	8.65	10.6	12.24	13.68	14.99	16.75	19.35
	5L 608 53 . 045	45065	1/8"	1.75	9.37	11.48	13.26	14.82	16.23	18.15	20.96
	5L 608 54 . 045	4507	1/8"	1.8	10.09	12.36	14.28	15.96	17.48	19.55	22.57
	5L 608 55 . 045	45075	1/8"	1.9	10.81	13.25	15.29	17.1	18.73	20.94	24.18
	5L 608 57 . 045	4508	1/8"	2.05	11.54	14.13	16.31	18.24	19.98	22.34	25.8
	5L 608 58 . 045	45087	1/8"	2.06	12.54	15.36	17.74	19.83	21.72	24.29	28.04
	5L 608 59 . 045	4509	1/8"	2.1	12.98	15.89	18.35	20.52	22.48	25.13	29.02
	5L 608 60 . 045	4510	1/8"	2.3	14.41	17.65	20.38	22.79	24.97	27.91	32.23

Order No.: CODE . CONNETION . MATERIAL

Example: 5L 608 36 . 020 . 018 . 3 Type 5L 608 with mentioned Q(lpm)@P(bar), Spray angle: 20˚, 1/8" BSPT, S.S.316

SPADFLOW
SPRAYING SYSTEMS AND NOZZLES

Flat-Fan Spray Nozzles
Spadflow Series **5L 608**

Webpage + STP

5L 608

Spray angle (α)	Code	General code	Connection** [inch]	A Ø [mm]	Flow rate [l/min] P [bar] 40	60	80	100	120	150	200
60°	5L 608 36 . 060	6002	1/8"	1	2.88	3.53	4.08	4.56	5	5.58	6.45
	5L 608 37 . 060	60021	1/8"	1.02	3.03	3.71	4.28	4.79	5.25	5.87	6.77
	5L 608 38 . 060	60025	1/8"	1.1	3.6	4.42	5.1	5.7	6.24	6.98	8.06
	5L 608 39 . 060	60028	1/8"	1.16	4.04	4.94	5.71	6.38	6.99	7.81	9.02
	5L 608 40 . 060	6003	1/8"	1.18	4.32	5.29	6.11	6.83	7.48	8.37	9.66
	5L 608 41 . 060	60034	1/8"	1.3	4.9	6	6.93	7.75	8.49	9.49	10.96
	5L 608 45 . 060	6004	1/8"	1.35	5.77	7.06	8.16	9.12	9.99	11.17	12.9
	5L 608 47 . 060	60045	1/8"	1.4	6.49	7.95	9.18	10.26	11.24	12.57	14.51
	5L 608 48 . 060	6005	1/8"	1.55	7.21	8.83	10.2	11.4	12.49	13.96	16.12
	5L 608 50 . 060	60055	1/8"	1.6	7.93	9.71	11.22	12.54	13.74	15.36	17.73
	5L 608 52 . 060	6006	1/8"	1.72	8.65	10.6	12.24	13.68	14.99	16.75	19.35
	5L 608 53 . 060	60065	1/8"	1.75	9.37	11.48	13.26	14.82	16.23	18.15	20.96
	5L 608 54 . 060	6007	1/8"	1.8	10.09	12.36	14.28	15.96	17.48	19.55	22.57
	5L 608 55 . 060	60075	1/8"	1.9	10.81	13.25	15.29	17.1	18.73	20.94	24.18
	5L 608 57 . 060	6008	1/8"	2.05	11.54	14.13	16.31	18.24	19.98	22.34	25.8
	5L 608 58 . 060	60087	1/8"	2.06	12.54	15.36	17.74	19.83	21.72	24.29	28.04
	5L 608 59 . 060	6009	1/8"	2.1	12.98	15.89	18.35	20.52	22.48	25.13	29.02
	5L 608 60 . 060	6010	1/8"	2.3	14.41	17.65	20.38	22.79	24.97	27.91	32.23
80°	5L 608 36 . 080	8002	1/8"	1	2.88	3.53	4.08	4.56	5	5.58	6.45
	5L 608 37 . 080	80021	1/8"	1.02	3.03	3.71	4.28	4.79	5.25	5.87	6.77
	5L 608 38 . 080	80025	1/8"	1.1	3.6	4.42	5.1	5.7	6.24	6.98	8.06
	5L 608 39 . 080	80028	1/8"	1.16	4.04	4.94	5.71	6.38	6.99	7.81	9.02
	5L 608 40 . 080	8003	1/8"	1.18	4.32	5.29	6.11	6.83	7.48	8.37	9.66
	5L 608 41 . 080	80034	1/8"	1.3	4.9	6	6.93	7.75	8.49	9.49	10.96
	5L 608 45 . 080	8004	1/8"	1.35	5.77	7.06	8.16	9.12	9.99	11.17	12.9
	5L 608 47 . 080	80045	1/8"	1.4	6.49	7.95	9.18	10.26	11.24	12.57	14.51
	5L 608 48 . 080	8005	1/8"	1.55	7.21	8.83	10.2	11.4	12.49	13.96	16.12
	5L 608 50 . 080	80055	1/8"	1.6	7.93	9.71	11.22	12.54	13.74	15.36	17.73
	5L 608 52 . 080	8006	1/8"	1.72	8.65	10.6	12.24	13.68	14.99	16.75	19.35
	5L 608 53 . 080	80065	1/8"	1.75	9.37	11.48	13.26	14.82	16.23	18.15	20.96
	5L 608 54 . 080	8007	1/8"	1.8	10.09	12.36	14.28	15.96	17.48	19.55	22.57
	5L 608 55 . 080	80075	1/8"	1.9	10.81	13.25	15.29	17.1	18.73	20.94	24.18
	5L 608 57 . 080	8008	1/8"	2.05	11.54	14.13	16.31	18.24	19.98	22.34	25.8
	5L 608 58 . 080	80087	1/8"	2.06	12.54	15.36	17.74	19.83	21.72	24.29	28.04
	5L 608 59 . 080	8009	1/8"	2.1	12.98	15.89	18.35	20.52	22.48	25.13	29.02
	5L 608 60 . 080	8010	1/8"	2.3	14.41	17.65	20.38	22.79	24.97	27.91	32.23

** Different connection sizes are available upon request
A = equivalent bore diameter

Order No.: CODE . CONNETION . MATERIAL

Example: 5L 608 36 . 020 . 018 . 3 Type 5L 608 with mentioned Q(lpm)@P(bar), Spray angle: 20°, 1/8" BSPT, S.S.316

SPADFLOW
SPRAYING SYSTEMS AND NOZZLES

Flat-Fan Spray Nozzles
Spadflow Series **5L 652 (HP)**

Webpage + STP

5L 652 (HP)

High Pressure Nozzle

Applications:

- High pressure cleaning

Properties:

- Housing: Stainless steel 303
- Insert: Hardened stainless steel 420F
- Extremely narrow spray depth
- Sharp, uniform flat fan spray

5L 652 (HP)

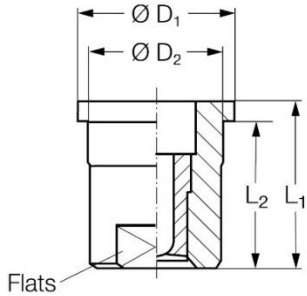

Dimensions [mm]						Weight
G	L_1	L_2	D_1	D_2	Flats	
3/8"	16.0	14.0	14.8	12.65	10	13 g

Material*	Code
Brass	1
S.S.304	2
S.S.316	3

* Different materials are available upon request

α	Spray coverage @ 250 mm
20°	85
30°	125
45°	170
60°	290

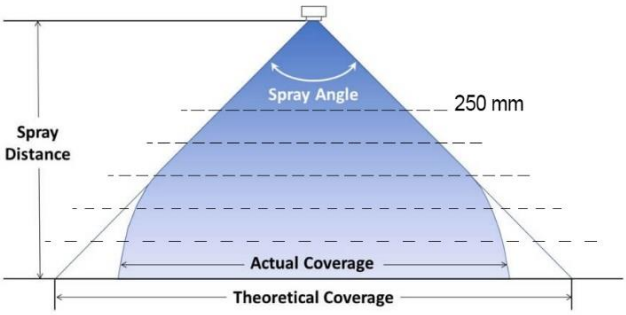

Spray angle (α)	Code	General code	A Ø [mm]	Flow rate [l/min] P [bar] 40	60	80	100	120	150	200
20°	5L 652H 36 . 020	2002	1	2.88	3.53	**4.08**	4.56	5	5.58	6.45
	5L 652H 37 . 020	20021	1.02	3.03	3.71	**4.28**	4.79	5.25	5.87	6.77
	5L 652H 38 . 020	20025	1.1	3.6	4.42	**5.1**	5.7	6.24	6.98	8.06
	5L 652H 39 . 020	20028	1.16	4.04	4.94	**5.71**	6.38	6.99	7.81	9.02
	5L 652H 40 . 020	2003	1.18	4.32	5.29	**6.11**	6.83	7.48	8.37	9.66
	5L 652H 41 . 020	20034	1.3	4.9	6	**6.93**	7.75	8.49	9.49	10.96
	5L 652H 44 . 020	20038	1.33	5.48	6.72	**7.75**	8.67	9.5	10.62	12.26
	5L 652H 45 . 020	2004	1.35	5.77	7.06	**8.16**	9.12	9.99	11.17	12.9
	5L 652H 46 . 020	20043	1.38	6.2	7.59	**8.77**	9.8	10.74	12	13.86
	5L 652H 47 . 020	20045	1.4	6.49	7.95	**9.18**	10.26	11.24	12.57	14.51
	5L 652H 48 . 020	2005	1.55	7.21	8.83	**10.2**	11.4	12.49	13.96	16.12
	5L 652H 50 . 020	20055	1.6	7.93	9.71	**11.22**	12.54	13.74	15.36	17.73
	5L 652H 52 . 020	2006	1.72	8.65	10.6	**12.24**	13.68	14.99	16.75	19.35
	5L 652H 53 . 020	20065	1.75	9.37	11.48	**13.26**	14.82	16.23	18.15	20.96
	5L 652H 54 . 020	2007	1.8	10.09	12.36	**14.28**	15.96	17.48	19.55	22.57
	5L 652H 55 . 020	20075	1.9	10.81	13.25	**15.29**	17.1	18.73	20.94	24.18
	5L 652H 57 . 020	2008	2.05	11.54	14.13	**16.31**	18.24	19.98	22.34	25.8
	5L 652H 58 . 020	20087	2.06	12.54	15.36	**17.74**	19.83	21.72	24.29	28.04
	5L 652H 59 . 020	2009	2.1	12.98	15.89	**18.35**	20.52	22.48	25.13	29.02
	5L 652H 60 . 020	2010	2.3	14.41	17.65	**20.38**	22.79	24.97	27.91	32.23
	5L 652H 62 . 020	2011	2.4	15.86	19.42	**22.42**	25.07	27.46	30.7	35.45

038– R01 – C00

Order No.: CODE . MATERIAL

Example.: 5L 652H 36 . 020 . 3 Type 5L 652H with mentioned Q(lpm)@P(bar), Spray angle: 20˚, S.S.316

SPADFLOW
SPRAYING SYSTEMS AND NOZZLES

Flat-Fan Spray Nozzles
Spadflow Series **5L 652 (HP)**

Webpage + STP

5L 652 (HP)

Spray angle (α)	Code	General code	A Ø [mm]	Flow rate [l/min] P [bar] 40	60	80	100	120	150	200
	5L 652H 64 . 020	**20125**	2.5	18.02	22.07	**25.48**	28.49	31.21	34.89	40.29
	5L 652H 65 . 020	**20131**	2.55	18.89	23.13	**26.71**	29.86	32.71	36.57	42.23
	5L 652H 66 . 020	**20139**	2.65	20.04	24.54	**28.34**	31.68	34.7	38.8	44.8
	5L 652H 67 . 020	**2015**	2.7	21.62	26.48	**30.58**	34.19	37.45	41.87	48.35
	5L 652H 70 . 020	**20175**	3	25.23	30.9	**35.68**	39.89	43.7	48.86	56.41
	5L 652H 36 . 030	**3002**	1	2.88	3.53	**4.08**	4.56	5	5.58	6.45
	5L 652H 37 . 030	**30021**	1.02	3.03	3.71	**4.28**	4.79	5.25	5.87	6.77
	5L 652H 38 . 030	**30025**	1.1	3.6	4.42	**5.1**	5.7	6.24	6.98	8.06
	5L 652H 39 . 030	**30028**	1.16	4.04	4.94	**5.71**	6.38	6.99	7.81	9.02
	5L 652H 40 . 030	**3003**	1.18	4.32	5.29	**6.11**	6.83	7.48	8.37	9.66
	5L 652H 41 . 030	**30034**	1.3	4.9	6	**6.93**	7.75	8.49	9.49	10.96
	5L 652H 44 . 030	**30038**	1.33	5.48	6.72	**7.75**	8.67	9.5	10.62	12.26
	5L 652H 45 . 030	**3004**	1.35	5.77	7.06	**8.16**	9.12	9.99	11.17	12.9
	5L 652H 46 . 030	**30043**	1.38	6.2	7.59	**8.77**	9.8	10.74	12	13.86
	5L 652H 47 . 030	**30045**	1.4	6.49	7.95	**9.18**	10.26	11.24	12.57	14.51
	5L 652H 48 . 030	**3005**	1.55	7.21	8.83	**10.2**	11.4	12.49	13.96	16.12
	5L 652H 50 . 030	**30055**	1.6	7.93	9.71	**11.22**	12.54	13.74	15.36	17.73
30°	**5L 652H 52 . 030**	**3006**	1.72	8.65	10.6	**12.24**	13.68	14.99	16.75	19.35
	5L 652H 53 . 030	**30065**	1.75	9.37	11.48	**13.26**	14.82	16.23	18.15	20.96
	5L 652H 54 . 030	**3007**	1.8	10.09	12.36	**14.28**	15.96	17.48	19.55	22.57
	5L 652H 55 . 030	**30075**	1.9	10.81	13.25	**15.29**	17.1	18.73	20.94	24.18
	5L 652H 57 . 030	**3008**	2.05	11.54	14.13	**16.31**	18.24	19.98	22.34	25.8
	5L 652H 58 . 030	**30087**	2.06	12.54	15.36	**17.74**	19.83	21.72	24.29	28.04
	5L 652H 59 . 030	**3009**	2.1	12.98	15.89	**18.35**	20.52	22.48	25.13	29.02
	5L 652H 60 . 030	**3010**	2.3	14.41	17.65	**20.38**	22.79	24.97	27.91	32.23
	5L 652H 62 . 030	**3011**	2.4	15.86	19.42	**22.42**	25.07	27.46	30.7	35.45
	5L 652H 64 . 030	**30125**	2.5	18.02	22.07	**25.48**	28.49	31.21	34.89	40.29
	5L 652H 65 . 030	**30131**	2.55	18.89	23.13	**26.71**	29.86	32.71	36.57	42.23
	5L 652H 66 . 030	**30139**	2.65	20.04	24.54	**28.34**	31.68	34.7	38.8	44.8
	5L 652H 67 . 030	**3015**	2.7	21.62	26.48	**30.58**	34.19	37.45	41.87	48.35
	5L 652H 70 . 030	**30175**	3	25.23	30.9	**35.68**	39.89	43.7	48.86	56.41
	5L 652H 36 . 040	4002	1	2.88	3.53	**4.08**	4.56	5	5.58	6.45
	5L 652H 37 . 040	**40021**	1.02	3.03	3.71	**4.28**	4.79	5.25	5.87	6.77
	5L 652H 38 . 040	**40025**	1.1	3.6	4.42	**5.1**	5.7	6.24	6.98	8.06
	5L 652H 39 . 040	**40028**	1.16	4.04	4.94	**5.71**	6.38	6.99	7.81	9.02
	5L 652H 40 . 040	**4003**	1.18	4.32	5.29	**6.11**	6.83	7.48	8.37	9.66
	5L 652H 41 . 040	**40034**	1.3	4.9	6	**6.93**	7.75	8.49	9.49	10.96
	5L 652H 44 . 040	**40038**	1.33	5.48	6.72	**7.75**	8.67	9.5	10.62	12.26
	5L 652H 45 . 040	**4004**	1.35	5.77	7.06	**8.16**	9.12	9.99	11.17	12.9
	5L 652H 47 . 040	**40040**	1.4	6.49	7.95	**9.18**	10.26	11.24	12.57	14.51
	5L 652H 48 . 040	**4005**	1.55	7.21	8.83	**10.2**	11.4	12.49	13.96	16.12
	5L 652H 50 . 040	**40055**	1.6	7.93	9.71	**11.22**	12.54	13.74	15.36	17.73
	5L 652H 52 . 040	**4006**	1.72	8.65	10.6	**12.24**	13.68	14.99	16.75	19.35
	5L 652H 53 . 040	**40065**	1.75	9.37	11.48	**13.26**	14.82	16.23	18.15	20.96
40°	**5L 652H 54 . 040**	**4007**	1.8	10.09	12.36	**14.28**	15.96	17.48	19.55	22.57
	5L 652H 55 . 040	**40075**	1.9	10.81	13.25	**15.29**	17.1	18.73	20.94	24.18
	5L 652H 57 . 040	**4008**	2.05	11.54	14.13	**16.31**	18.24	19.98	22.34	25.8
	5L 652H 58 . 040	**40087**	2.06	12.54	15.36	**17.74**	19.83	21.72	24.29	28.04
	5L 652H 59 . 040	**4009**	2.1	12.98	15.89	**18.35**	20.52	22.48	25.13	29.02
	5L 652H 60 . 040	**4010**	2.3	14.41	17.65	**20.38**	22.79	24.97	27.91	32.23
	5L 652H 62 . 040	**4011**	2.4	15.86	19.42	**22.42**	25.07	27.46	30.7	35.45
	5L 652H 64 . 040	**40125**	2.5	18.02	22.07	**25.48**	28.49	31.21	34.89	40.29
	5L 652H 65 . 040	**40131**	2.55	18.89	23.13	**26.71**	29.86	32.71	36.57	42.23
	5L 652H 66 . 040	**40139**	2.65	20.04	24.54	**28.34**	31.68	34.7	38.8	44.8
	5L 652H 67 . 040	**4015**	2.7	21.62	26.48	**30.58**	34.19	37.45	41.87	48.35
	5L 652H 70 . 040	**40175**	3	25.23	30.9	**35.68**	39.89	43.7	48.86	56.41
	5L 652H 72 . 040	**4020**	3.05	28.83	35.31	**40.78**	45.59	49.94	55.84	64.47
	5L 652H 76 . 040	**4025**	3.5	36.04	44.14	**50.97**	56.99	62.43	69.8	80.6
	5L 652H 79 . 040	**4030**	3.9	43.25	52.97	**61.16**	68.38	74.91	83.75	96.7

Order No.: CODE . MATERIAL

Example.: 5L 652H 36 . 020 . 3 Type 5L 652H with mentioned Q(lpm)@P(bar), Spray angle: 20˚, S.S.316

SPADFLOW
SPRAYING SYSTEMS AND NOZZLES

Flat-Fan Spray Nozzles
Spadflow Series **5L 652 (HP)**

Webpage + STP

5L 652 (HP)

Spray angle (α)	Code	General code	A Ø [mm]	Flow rate [l/min] P [bar] 40	60	80	100	120	150	200
45°	5L 652H 36 . 045	4502	1	2.88	3.53	**4.08**	4.56	5	5.58	6.45
	5L 652H 37 . 045	45021	1.02	3.03	3.71	**4.28**	4.79	5.25	5.87	6.77
	5L 652H 38 . 045	45025	1.1	3.6	4.42	**5.1**	5.7	6.24	6.98	8.06
	5L 652H 39 . 045	45028	1.16	4.04	4.94	**5.71**	6.38	6.99	7.81	9.02
	5L 652H 40 . 045	4503	1.18	4.32	5.29	**6.11**	6.83	7.48	8.37	9.66
	5L 652H 41 . 045	45034	1.3	4.9	6	**6.93**	7.75	8.49	9.49	10.96
	5L 652H 44 . 045	45038	1.33	5.48	6.72	**7.75**	8.67	9.5	10.62	12.26
	5L 652H 45 . 045	4504	1.35	5.77	7.06	**8.16**	9.12	9.99	11.17	12.9
	5L 652H 47 . 045	45045	1.4	6.49	7.95	**9.18**	10.26	11.24	12.57	14.51
	5L 652H 48 . 045	4505	1.55	7.21	8.83	**10.2**	11.4	12.49	13.96	16.12
	5L 652H 50 . 045	45055	1.6	7.93	9.71	**11.22**	12.54	13.74	15.36	17.73
	5L 652H 52 . 045	4506	1.72	8.65	10.6	**12.24**	13.68	14.99	16.75	19.35
	5L 652H 53 . 045	45065	1.75	9.37	11.48	**13.26**	14.82	16.23	18.15	20.96
	5L 652H 54 . 045	4507	1.8	10.09	12.36	**14.28**	15.96	17.48	19.55	22.57
	5L 652H 55 . 045	45075	1.9	10.81	13.25	**15.29**	17.1	18.73	20.94	24.18
	5L 652H 57 . 045	4508	2.05	11.54	14.13	**16.31**	18.24	19.98	22.34	25.8
	5L 652H 58 . 045	45087	2.06	12.54	15.36	**17.74**	19.83	21.72	24.29	28.04
	5L 652H 59 . 045	4509	2.1	12.98	15.89	**18.35**	20.52	22.48	25.13	29.02
	5L 652H 60 . 045	4510	2.3	14.41	17.65	**20.38**	22.79	24.97	27.91	32.23
	5L 652H 62 . 045	4511	2.4	15.86	19.42	**22.42**	25.07	27.46	30.7	35.45
	5L 652H 64 . 045	45125	2.5	18.02	22.07	**25.48**	28.49	31.21	34.89	40.29
	5L 652H 65 . 045	45131	2.55	18.89	23.13	**26.71**	29.86	32.71	36.57	42.23
	5L 652H 66 . 045	45139	2.65	20.04	24.54	**28.34**	31.68	34.7	38.8	44.8
	5L 652H 67 . 045	4515	2.7	21.62	26.48	**30.58**	34.19	37.45	41.87	48.35
	5L 652H 70 . 045	45175	3	25.23	30.9	**35.68**	39.89	43.7	48.86	56.41
	5L 652H 72 . 045	4520	3.05	28.83	35.31	**40.78**	45.59	49.94	55.84	64.47
	5L 652H 76 . 045	4525	3.5	36.04	44.14	**50.97**	56.99	62.43	69.8	80.6
	5L 652H 79 . 045	4530	3.9	43.25	52.97	**61.16**	68.38	74.91	83.75	96.7
60°	5L 652H 36 . 060	6002	1	2.88	3.53	**4.08**	4.56	5	5.58	6.45
	5L 652H 37 . 060	60021	1.02	3.03	3.71	**4.28**	4.79	5.25	5.87	6.77
	5L 652H 38 . 060	60025	1.1	3.6	4.42	**5.1**	5.7	6.24	6.98	8.06
	5L 652H 39 . 060	60028	1.16	4.04	4.94	**5.71**	6.38	6.99	7.81	9.02
	5L 652H 40 . 060	6003	1.18	4.32	5.29	**6.11**	6.83	7.48	8.37	9.66
	5L 652H 41 . 060	60034	1.3	4.9	6	**6.93**	7.75	8.49	9.49	10.96
	5L 652H 45 . 060	6004	1.35	5.77	7.06	**8.16**	9.12	9.99	11.17	12.9
	5L 652H 47 . 060	60045	1.4	6.49	7.95	**9.18**	10.26	11.24	12.57	14.51
	5L 652H 48 . 060	6005	1.55	7.21	8.83	**10.2**	11.4	12.49	13.96	16.12
	5L 652H 50 . 060	60055	1.6	7.93	9.71	**11.22**	12.54	13.74	15.36	17.73
	5L 652H 52 . 060	6006	1.72	8.65	10.6	**12.24**	13.68	14.99	16.75	19.35
	5L 652H 53 . 060	60065	1.75	9.37	11.48	**13.26**	14.82	16.23	18.15	20.96
	5L 652H 54 . 060	6007	1.8	10.09	12.36	**14.28**	15.96	17.48	19.55	22.57
	5L 652H 55 . 060	60075	1.9	10.81	13.25	**15.29**	17.1	18.73	20.94	24.18
	5L 652H 57 . 060	6008	2.05	11.54	14.13	**16.31**	18.24	19.98	22.34	25.8
	5L 652H 58 . 060	60087	2.06	12.54	15.36	**17.74**	19.83	21.72	24.29	28.04
	5L 652H 59 . 060	6009	2.1	12.98	15.89	**18.35**	20.52	22.48	25.13	29.02
	5L 652H 60 . 060	6010	2.3	14.41	17.65	**20.38**	22.79	24.97	27.91	32.23
	5L 652H 62 . 060	6011	2.4	15.86	19.42	**22.42**	25.07	27.46	30.7	35.45
	5L 652H 64 . 060	60125	2.5	18.02	22.07	**25.48**	28.49	31.21	34.89	40.29
	5L 652H 65 . 060	60131	2.55	18.89	23.13	**26.71**	29.86	32.71	36.57	42.23
	5L 652H 66 . 060	60139	2.65	20.04	24.54	**28.34**	31.68	34.7	38.8	44.8
	5L 652H 67 . 060	6015	2.7	21.62	26.48	**30.58**	34.19	37.45	41.87	48.35
	5L 652H 70 . 060	60175	3	25.23	30.9	**35.68**	39.89	43.7	48.86	56.41
	5L 652H 72 . 060	6020	3.05	28.83	35.31	**40.78**	45.59	49.94	55.84	64.47
	5L 652H 76 . 060	6025	3.5	36.04	44.14	**50.97**	56.99	62.43	69.8	80.6
80°	5L 652H 36 . 080	8002	1	2.88	3.53	**4.08**	4.56	5	5.58	6.45
	5L 652H 37 . 080	80021	1.02	3.03	3.71	**4.28**	4.79	5.25	5.87	6.77
	5L 652H 38 . 080	80025	1.1	3.6	4.42	**5.1**	5.7	6.24	6.98	8.06
	5L 652H 39 . 080	80028	1.16	4.04	4.94	**5.71**	6.38	6.99	7.81	9.02
	5L 652H 40 . 080	8003	1.18	4.32	5.29	**6.11**	6.83	7.48	8.37	9.66
	5L 652H 41 . 080	80034	1.3	4.9	6	**6.93**	7.75	8.49	9.49	10.96

Order No.: CODE . MATERIAL

Example.: 5L 652H 36 . 020 . 3 Type 5L 652H with mentioned Q(lpm)@P(bar), Spray angle: 20˚, S.S.316

Flat-Fan Spray Nozzles
Spadflow Series **5L 652 (HP)**

Webpage + STP

Spray angle (α)	Code	General code	A Ø [mm]	Flow rate [l/min] P [bar] 40	60	80	100	120	150	200
	5L 652H 45 . 080	**8004**	1.35	5.77	7.06	**8.16**	9.12	9.99	11.17	12.9
	5L 652H 47 . 080	**80045**	1.4	6.49	7.95	**9.18**	10.26	11.24	12.57	14.51
	5L 652H 48 . 080	**8005**	1.55	7.21	8.83	**10.2**	11.4	12.49	13.96	16.12
	5L 652H 50 . 080	**80055**	1.6	7.93	9.71	**11.22**	12.54	13.74	15.36	17.73
	5L 652H 52 . 080	**8006**	1.72	8.65	10.6	**12.24**	13.68	14.99	16.75	19.35
	5L 652H 53 . 080	**80065**	1.75	9.37	11.48	**13.26**	14.82	16.23	18.15	20.96
	5L 652H 54 . 080	**8007**	1.8	10.09	12.36	**14.28**	15.96	17.48	19.55	22.57
	5L 652H 55 . 080	**80075**	1.9	10.81	13.25	**15.29**	17.1	18.73	20.94	24.18
	5L 652H 57 . 080	**8008**	2.05	11.54	14.13	**16.31**	18.24	19.98	22.34	25.8
	5L 652H 58 . 080	**80087**	2.06	12.54	15.36	**17.74**	19.83	21.72	24.29	28.04
	5L 652H 59 . 080	**8009**	2.1	12.98	15.89	**18.35**	20.52	22.48	25.13	29.02
	5L 652H 60 . 080	**8010**	2.3	14.41	17.65	**20.38**	22.79	24.97	27.91	32.23
	5L 652H 62 . 080	**8011**	2.4	15.86	19.42	**22.42**	25.07	27.46	30.7	35.45
	5L 652H 64 . 080	**80125**	2.5	18.02	22.07	**25.48**	28.49	31.21	34.89	40.29
	5L 652H 65 . 080	**80131**	2.55	18.89	23.13	**26.71**	29.86	32.71	36.57	42.23
	5L 652H 66 . 080	**80139**	2.65	20.04	24.54	**28.34**	31.68	34.7	38.8	44.8
	5L 652H 67 . 080	**8015**	2.7	21.62	26.48	**30.58**	34.19	37.45	41.87	48.35
	5L 652H 70 . 080	**80175**	3	25.23	30.9	**35.68**	39.89	43.7	48.86	56.41
	5L 652H 72 . 080	**8020**	3.05	28.83	35.31	**40.78**	45.59	49.94	55.84	64.47
	5L 652H 76 . 080	**8025**	3.5	36.04	44.14	**50.97**	56.99	62.43	69.8	80.6

A = equivalent bore diameter

Order No.: CODE . MATERIAL

Example.: 5L 652H 36 . 020 . 3 Type 5L 652H with mentioned Q(lpm)@P(bar), Spray angle: 20˚, S.S.316